ProSun
INTERNATIONAL

Luxura X7

Model 42X	10 MINUTES
Luxura X7 230V	



USER MANUAL

MARK76X7001 Rev 4 Approved on 6/7/19 by JCH

CONGRATULATIONS on your ProSun® purchase!



Please make sure you read this manual carefully before using this equipment and specifically the maintenance schedule. Keep this manual available for future reference. If you have any questions please contact ProSun directly.

ProSun International
2442 23rd Street North
Saint Petersburg FL 33713
Telephone: 727.825.040

⚠ WARNING!



ProSun has drawn up a maintenance schedule to ensure good performance and maximum life of your unit. It is strongly recommended to adhere to these service instructions and intervals. Always disconnect the power before starting any maintenance work or cleaning!!

Read all the instructions thoroughly, failure to do so may result in:

- Serious death or injury
- Damage to the device or environment



WARNING: No modfication of this equipment is allowed.

For the safety of yourself and others around you please read all the following instructions thoroughly. Please allow all operators of this equipment to read these instructions.

COPYRIGHT
ProSun International
The contents may not be duplicated (in whole or part), distributed or utilized for competitive purposes without authorization or disclosed to other parties. Changes cannot be made to the information herein.

Table of Contents

Important Customer Information 5
- Who Should Use, Read, & Understand this Manual 5
- Indications For Use 5
- Intended Use 5

Warning Signs & Symbols 5

Preparing the Product For Use 8
- Export 8
- Transportation 8
- Delivery 9
- Ventilation 9
- Installation & Set-up 9
- Environmental Conditions for Transport & Storage 9
- Enviromental Conditions for Operation 9
- Comissioning of the Tanning Equipment 11

General Safety Information 12
- General Safety Notes 12
- Limits of Application 12
- The Tanning Process 15
- Exposure Schedule 15
- Tanning Sensitivity 16

Equipment Components & Description 17
- Device Description 18
- Options for Device 19
- Lamp Configuration 20

Dimensions 21
- Equipment Dimensions 21
- Recommended Room Size 21

Signs and Labels on Equipment 22

Technical Data 26
- Electrical Specifications 26

Connecting Equipment to External Timer .....
- OPTION 1-Connecting T-Max system to the unit using the Wall Mount Enclosure 29
- OPTION 2-Cables for T-max had been run trough the wall and the T-max is already connected 34

Tanning Bed Standards 35

Before Your Tanning Session 39
- Make-up & Cosmetics 39
- Jewelry 39
- Hair & Loose Items 39
- Medications 39
- Contact Lenses 39
- Showering & Hydrating the Skin 39

After the Tanning Session 40
- Cleaning 40
- Cleaning the Acrylics 40

Operation of the Equipment 41
- Obligations of the Business Operator 41
- Staff Training 41

How to Operate the Equipment 42
Choosing the Correct Exposure Time 42
Normal Equipment Operation & Software 43
Operating Modes 43
Standby Mode 43
Tanning Mode 43
Cool Down Mode 43
Service Mode 43
Starting the Tanning Session 44
Stopping the Tanning Session 45
Customer Concerns 46
Storing the Device 47
Decommissioning Your Tanning Unit 47
Storage 47
Disposal 47
Control Functions 48
Control Without External Timer or Coins 49
Operational Functions 50
Parameters Menu 53
Reading the Hour Counters and Software 56
Error Messages 57
Care & Maintenance 58
Basic Care Maintenance 59
Maintenance Schedule 59
Cleaning & Disinfecting Acrylics 60
Cleaning Plastic Surfaces 61
Cleaning Lamps 61
Cleaning the Machine 61
Maintenance by Skilled Persons 61
Troubleshooting Guide 62
Replacement of Components 63
Removing Acrylics 64
Replacing the Lamps 65
Replacing the Facial Tanners 66
Changing SoundAround 66
Removing and cleaning Filter Holders 67
Emptying the A/C Container 68
Replacing the Qsens & Xsens Container 69
Assembly Introduction 70
Included Parts 71
Symbols 72
Assembly 73
Warranty 111

Important Customer Information

Who should use, read and understand this manual:

- Owners - Owners are people that have this equipment in their business and have read and fully understood this whole user manual. The owner is responsible for ensuring that any other person who uses this equipment has also read and understood this user manual and labeling on the equipment.
- Operator/User - People who are responsible for the operation, cleaning as well as general maintenance care, as outlined in this manual, and who instruct the patients in the operation of the equipment. All operators have fully read and understood this user manual and labeling on the equipment.
- Patient - Any person that receives the tanning session.
- Service technicians- Certified technicians who will perform assembly and maintenance work on the equipment and have fully read and understood the user manual and labeling on the equipment.

All people that will be operating this equipment need to fully read and understand these instructions and all labeling on the equipment. A copy of the user manual should be readily available.This manual may include features that are not included for your bed. Any service work outside of the preventative care table in this manual should be done by a ProSun authorized technician.

This is a Class I ME Equipment, with Type B Applied Parts used for continuous use for a maximum of 10 minutes. The equipment is not intended to be sterilized or for use in an oxygen rich environment.

Indications for use:

Tanning bed Systems are intended to provide tanning of the human skin.

Intended use:

Tanning bed systems are intended to provide tanning of the human skin.

Warning signs and symbols

Danger and Safety Symbols:

 DANGER!	Danger Hazard exists for human health.
 WARNING!	**WARNING:** Hazard exists that can be dangerous to human health if instructions are not followed properly. **WARNING:** To avoid risk of electric shock, this equipment must only be connected to a supply mains with protective earth. **WARNING:** Care must be taken when operating this equipment around other equipment to avoid reciprocal interference. Potential electromagnetic or other interference could occur to this or to other equipment.Try to minimize interference by not using other equipment in conjuction with this device. **WARNING:** This equipment is designed to comply with IEC 60601-1-2. This equipment generates, uses and can radiate radio frequency energy and, if not installed and used in accordance with these instructions, may cause harmful interference to other devices in the vincinity. However, there is no guarantee that interference will not occur in a particular installation. Harmful interference to other devices can be determined by turning this equipment ON and OFF. Try to correct the interference using on or more of the following: • Reorient or relocate the receiving device. • Increase the separation between the equipment. • Connect the equipment to an outlet on a different circuit from that to which the other device(s) are connected and consult ProSun International for help.

	High Voltage exists and is dangerous for human contact.
	UV Radiation hazard for Human Health
	Caution Symbol means to proceed with caution and follow instructions carefully.
	ESD-Sensitive devices, do not touch without using necessary proper precautions.
	Type B Applied Parts

Symbols found on equipment and packaging:

	Follow and read instructions thoroughly prior to using equipment.
	Keep equipment dry.
	Fragile.
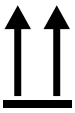	This way up.
	Use only long forks on the fork lift and only lift on the correct openings.
	Do not double stack. This symbol indicates that the items shall not be vertically stacked, either because of the nature of the transport packaging or because of the nature of the items themselves.
	Temperature limit indicates the maximum and minimum temperature limits at which the item shall be stored, transported or used.

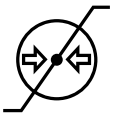	Atmospheric pressure limitation. This symbol is accompanied by the upper and lower limits of atmospheric pressure for storage and transportation.
	Humidity limitation indicates the acceptable upper and lower limits of relative humidity for transport and storage.
	Protective earth connections.
	Recyclable Material
	Polystyrene
	Cardboard
	Mixed Paper
	Wood
	Waste of electrical and electronic equipment must not be disposed as unsorted municipal waste. It must be collected separately, and must be disposed as per local regulations.
	Alternating Current. Single Phase
	Three phase alternating current.

Preparing the Product for Use

This equipment is in conformity with FDA standards 21 CFR 1040.20 for sunlamp products.

The device in this manual is intended for use in the United States and Canada. If this equipment is exported to other countries, other standards may apply and not all information in the operator manual may be applicable. ProSun does not assume any liability if there is non-compliance outside of the intended sale territories of the United States or Canada. The exporter assumes their own risk by removing this equipment outside of the United States or Canada.

Transportation:

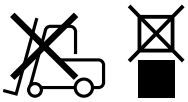

Equipment must be transported on the pallet on which it is mounted, and should not be double stacked with other transport materials. If a forklift is used the long forks should be used and only from the correct side. Only lift the load a few centimeters and move it to the place of installation.



CAUTION - If the short forks are used damage may occur.

If a forklift cannot be used then the device must be partially disassembled from the pallet for transport. Installers or persons transporting the equipment may want to use a dolly to move the disassembled components but be careful of the weight. Each piece should be moved individually to the place of installation.

During transportation environmental conditions must be met, ambient an ambient temperature range of - 40 °C to + 70 °C or -40°F to 158°F, relative humidty range of between 10 to 95% including condensation and atomospheric pressure range of 50 kPa to 106 kPa.
If ambient temperature change is different from required temperature then let equipment sit at proper temperature for at least 2 hours prior to installation.

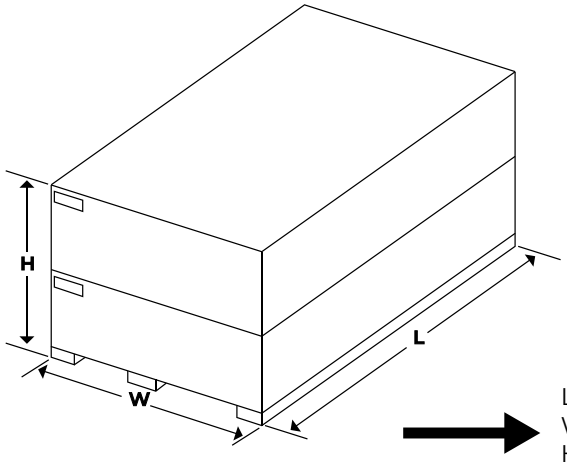

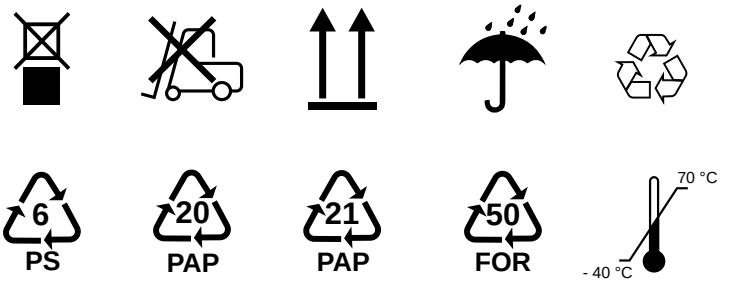

Length: 91 inches or 231 cm
Width: 46 inches or 116 cm
Height: 55 inches or 139.7 cm
Weight: 1100 lbs or 499 kg

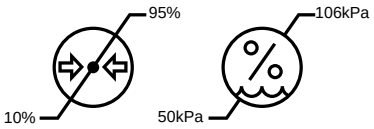

Delivery:

Once equipment is delivered make sure proper temperatures, humidty and atmospheric pressure are in place.

The following items are included in the delivery:

- Tanning equipment
- Protective goggles
- Tanning bed cleaner
- All parts in assembly manual
- User Manual



Note that equipment is delivered through third party freight company. Equipment will not be brought inside the building by freight company unless prior arrangements are made. Coordinate with ProSun installation department to set up delivery and installation details.

In a commercial setting an external timer is required. ProSun recommends to use this accesory (T-Max Flushmount G2).

Ventillation:



DANGER!

The Device must always have proper ventilation. Failure to do so can cause in serious safety hazards and overheating of the equipment.

Installation and Set-up:

Equipment should only be installed in dry rooms with proper ventillation and airing. The room should be the recommended size of 9 x 9 ft in order to allow for good air flow.

The unit should not be set up in a mobile environment or facility, i.e. trains, buses, ships. The unit also should not be used outdoors, if used outdoors damage to the equipment is possible and the manufacturer will not be held liable

Before starting the installation process or operating the equipment the transportation pallet should be removed. Observe correct room sizes prior to installation the equipment and ensure that room has correct electrical specfications. The customer must have provided a dedicated power source when called for in the technical specficaitions of the unit.

Environmental conditions for transport and storage:

- Relative humidty range of 10% to 95% including condensation.
- Atmospheric pressure range of 50kPa to 106 kPa.
- Storage temperature range: -40 °F (-40 °C) and 158 °F (70 °C)
- Let equipment sit for at least 2 hours if range was outside of ambient temperature

Environmental conditions for operation:

- Relative humidty range of 30% to 75% including condensation.
- Atmospheric pressure range of 50kPa to 106 kPa.
- Optimum ambient temperature range: 50°F (10°C) and 86 °F (30°C)


DANGER!

Installation can present a Danger with electrical shock or burns, only authorized personnel should install the equipment. Initial installation should be done by a ProSun certified technician. As the equipment owner it is your responsibility to ensure that correct electrical requirements are met and followed.

Overheating can occur if proper ventilation is not followed. Never obstruct the airways in the inflow and outflow areas. If proper ventillation is not followed system malfunction and damage may occur. Always install the unit at proper distance from walls in order to have proper airflow. Failure to do so may cause system failures or errors.

The customer is responsible for all costs associated with the preparation of the installation of the equipment. This includes but is not limited to room preparation, costs, fees, permits, and inspections unless specified otherwise in the sales order for the equipment purchased. ProSun and all authorized parties shall reserve the right to refuse to install equipment into any room which has not been properly prepared in accordance with the electrical specification and room requirements.

The electrical contractor or his designee shall provide and install all electrical material as specified for a safe operating system. ProSun certified technicians will not perform any electrical work. The recommended electrical plan must be coordinated between the customer and the electrical contactor. Any deviation of the electrical, before, during and after equipment installation is the responsibility of the customer. The electrical contractor or his designee shall ensure the completion of all electrical requirements prior to the installation of any ProSun equipment. All wires shall be single solid runs without splices, meeting NEMA standards. The electrical contractor or his designee should ring out, tag and terminate all wires at both ends. Each should be inspected to ensure that no wires have been grounded or are left open. ProSun certified technicians are not responsible for the final installation of the electrical system, the electrical contractor or his designee should be present to make the final electrical connection upon completion of the installation of the equipment.

The customer shall bear the sole responsibility for compliance with all applicable codes, OSHA, NEMA, local and national Standards. All electrical work shall conform to the requirements of the national electrical code, OSHA or applicable local and or state ordinances.


WARNING!

WARNING: Position the equipment so that disconnection to the mains circuit breaker can be easily made during the unexpected error which could lead to a hazardous situation.


WARNING!

WARNING: Power supply cord must be replaced by ProSun certified technician.


WARNING!

WARNING: Inspect equipment for any obvious physical damage before use.

Commissioning of the tanning equipment

The equipment is initially commissioned by a certified ProSun technician. The device will be properly assembled and handed over ready for us. In order to properly commission the tanning equipment, the business owner must ensure that the location is ready prior to the equipment being installed. This included having correct power requirements and having the room in which the unit will be located ready.

The unit incorporates special preventive measures with regard to the electromagnetic compatibility and must be installed and commissioned according to the EMC instructions obtained from the assembly instructions.

If the equipment has not been used for a longer period of time, then it must first be inspected by a certified technician before being put back into operation again.

General Safety Information

General Safety Notes:

Any adult with any of the below issues should not use this tanning equipment. If you are unsure consult your doctor prior to use.

Contraindication: This sunlamp product is contraindicated for use on persons under the age of 18 years.

Contraindication: This sunlamp product must not be used if skin lesions or open wounds are present.

Contraindication: This sunlamp product should not be used on individuals who have had skin cancer or have a family history of skin cancer. People repeatedly exposed to ultraviolet sunlamp products should be regularly evaluated for skin cancer.

Contraindication: People with Skin Type I, who are prone to sunburn should not use this equipment, or had several sever sunburns as a child. People who are already suffering from sunburn should not use this equipment until the sunburn is completely gone and they can properly evaluate skin type and calculate their exposure schedule.

Contraindication: People taking photosensitive medications, medicines, or people who are being treated by a doctor for conditions related to photosensitivity.

Contraindication: Peope who wear a heart pacemaker.

Contraindication: People are who are prone to freckles, or people with naturally red hair color.

Contraindication: People who have atypical discolored skin areas and/or with more than five atypical moles with a diameter of 5 milimeters. People with more than 16 moles with a diameter greater than or equal to 2 milimeters. If you are unsure consult your doctor prior to your tanning session.

Contraindication: People who do not tan at all or cannot tan without getting a sunburn.

Limits of Application:

Never operate this unit when the ambient room air temperature is greater than 104 degrees faranheit.



WARNING!

Never operate this unit in a commercial setting when the remote timer is not working properly.

Always disconnect the unit from its power supply when servicing or repairing the unit.



WARNING!

Allow at least 48 hours to pass between each tanning session. Tan based on the exposure sticker on the unit or in this manual. Skin Type I should not tan. As an owner you must properly instruct all users on using the exposure table located on the front of the bed and only tanning for the minutes based on their skin type. If any negative effect occurs, stop using the equipment and consult a physician.

If you are taking any kind of medication make sure to first consult consult your doctor before tanning. Certain ingredients in medication can induce UV light sensitivity and cause allergic reactions. A table describing a number of known allergens can be seen later in this manual.

For best facial tanning results make sure to remove all facial cosmetics thoroughly prior to each session. Best results may occur if no cosmetics are used 3 hours or even the day of the tanning session. If certain cosmetics are used you may experience a UV light sensitivity that could cause an allergic reaction. See the table in this manual describing a number of known allergens later in this manual.

Do not use tanning lotions, oils or gels that contain SPF (sun protection factor) as these could hinder the desired tanning effect and may not have the same protection with tanning equipment as with natural sunlight. Use only those that are specfically manufactured for use in tanning beds.

If your skin develops or displays any sort of undesired reaction such as a rash, acne, or unusual dryness you should stop tanning immediately and consult your doctor.

Always avoid sunburn. If you overexposure yourself you could get a sunburn on your skin. Should this occur, stop tanning and wait for the reddish color to subside before recalculating your exposure schedule and resuming treatment.

Read the WARNING and DANGER label situated in full view of the user on the tanning bed before beginning your tanning session.

Never use tanning accelerator pills in conjunction with your tanning treatement as these could lead to an increase of skin sensitivity and sunburn.

Always wear protective eye wear.

Only (1) one tanner per session is allowed in the equipment.

The manufacturer cannot be held liable for damages or injuries from improper use of the equipment or non-observance of the operating instructions.



This tanning bed is an over the counter tanning device that emits ultra violet light in the UVB and UVA region of the spectrum intended for the cosmetic tanning of the human skin in adults.

Only one user should tan in the unit at a time.

Wear protective eyewear during the duration of the sesion to protect the eyes against UV radiation. Only use approved protective eyewear. Using the equipment without protective eyewear may in eye injury or diseases. The unprotected eye can become inflamed on the surface, and in certain cases the retina can be damaged by excessive radiation. Cataracts can form after repeated exposure to radiation.

You should not modify your equipment as it may cause serious injury or damage to your unit.

Infections can be transfered through skin contact, the unit should be properly cleaned after every use. All items that the user can come in contact with shall be properly cleaned and disinfected after every session. This includes but is not limited to:

- Goggles
- Base floor (when applicable)
- Acrylics
- Handles and control panel
- MP3 cable (when applicable)
- Headrest

Use only approved cleaner such as Lucasol One Step to clean and disinfect the tanning unit.

Long term consequences can exist if proper precaution is not taken.

- Over exposure should be avoided.
- Elderly people should not use this equipment without consulting their physician first.
- Children under the age of 18 cannot use these tanning deivces.
- It is recommended that expectant mothers do not use these devices. While there are no clinical studies of negative effects of tanning with expectant mothers it is still not recommended.

This is a commercial grade tanning bed.

The Tanning Process

The tanning unit you have purchased is designed to concentrate optimal levels of UVA, in conjunction with very low percentages of UVB, on the outermost layers of the skin, so as to stimulate the production of Melanic pigment, which is slightly pink in its dormant state, these causes it to turn brown after excretion. The more Melanin cells present in the skin determines the amount of pigment that will be excreted and distributed, and therefore the extent of the tan.

UVA has a higher frequency of wavelength than UVB or UVC, and is the ray which is thought to promote the excretion of pigment from the hormone called “Melanin”, which occurs naturally in the skin.

UVB is believed to be the catalyst, or kick-starter for the Melanin to begin producing pigment. It is also the ray which causes sunburn and wrinkling, so the skin can withstand only brief dosages at very small percentage levels to UVA.

UVC, present in natural sunlight, is mostly filtered out by the ozone layer in the upper atmosphere, and is extremely harmful to human skin, at any level of exposure.

In tanning beds, only small percentages of UVB to UVA are used to effect tanning - example: 95% UVA-to-5% UVB - whereby the individual tanner will be placed on an acceptable exposure schedule according to his or her skin type. There is no UVC emitted by tanning lamps.

Do not tan more than once every 48 hours. Depending on skin type, tanning sessions, each consisting of 10 to 12 individual sessions to create the base tan should be done continuously. However, no more than 3 of these treatments per week should occur. For more in depth detail on the tanning schedule see our exposure sticker on the unit and in this manual.

SKIN TYPE I - This individual burns easily and should NOT tan.
SKIN TYPE II - This individual burns easily and severely and should tan minimally.
SKIN TYPE III - This individual burns moderately and tans moderately.
SKIN TYPE IV - This individual burns minimally and tans well/ above average.

Exposure Schedule:

RECOMMENDED TANNING SCHEDULE

SKIN TYPE			MAXIMUM EXPOSURE TIME IN MINUTES Week 1	Week 2	Week 3	Maximum
I	Sensitive	Burns easily & severely Does not tan	Tanning Not Advised			
II	Light Skin	Burns easily & severely Tans minimally	1	3	6	10
III	Normal Skin	Burns moderately Tans moderately	2	4	8	10
IV	Dark Skin	Burns minimally Tans well /above average	3	5	9	10

The following lamps
(or compatible)
have been certified
for use with this equipment:

Canopy:
ProTech II High Intensive R-UVA 200w
Bench:
ProTech II High Intensive R-UVA 200w XL
Facial:
Protech HP 400

This product is in conformity with performance standards for sun lamp products under 21 CFR PART 1040.20

CERTIFIED LAMPS

X5_34/16

Tanning Sensitivity

Before using a tanning device always check with your doctor first.

***The following may increase skin sensitivity:**

- Perfumes and colognes containing furocoumarins.
- Compounds from natural products such as plants and fruits (their natural oils can sensitize the skin to sunlight.
- Food and fruits that contain photosensitizing agents: celery, carrots, lime, coriander, parsley, fennel, dill, buttercup, mustard and figs.

A partial list of known photosensitizing medications is listed below by name:

ACETOHEXAMIDE (DYMELOR)
ACRIDINE PREPARATIONS (SLIGHT)
AGAVE LECHUGUILLA (AMARYLLIS)
AGRIMONY
9-AMINOACRIDINE
AMINOBENZOIC ACID
AMITRIPTYLINE (ELAVIL, ETC.)
ANESTHETICA (PROCAINE GROUP)
ANGELICA
ANTHRACENE
ANTIMALARIALS
ARSENICALS
BARBITURATES
BAVACHE (CORYLIFOLIA)
BENEZENE
BENZOPYRINE
BERGAMOT (PERFUME)
BITHIONAL (ACTAMER, LOROTHIDOL)
BLANKOPHORES (SULFA DERIVATIVES)
BULOSEMIDE (JADIT)
BROMCHLORSALICYLANILID
4-BUTYL-4-
CHLOROSALICYLANILIDE
CARBAMAZEPINE (TEGRETOL)
CARBINOXAMINE D-FORM (TWISTON R-A)
CARBUTAMIDE (NADISAN)
CARROTS, WILD CEDAR OIL
CELERY
CHLOROPHYLL
CHLOROTHIAZIDE (DIURIL)
CHLORPROMAZINE (THORAZINE)
CHLORTETRACYCLINE (AUREOMYCIN)
CITRON OIL
CITRUS FRUITS
CLOVER
COAL TAR
CONTRACEPTIVES, ORAL
DEMECLOCYCLINE
DECLOMYCIN
DIMETHYLCHLORTETACYCLINE
DESIPRAMINE (NORPRAMIN, PERTOFRANE) DIBENZOPYRAN DERIVATES
DICYANINE-A
DIETHYLSTILBESTROL
DIGALLOYL TRIOLEATE SUNSCREEN
DILL
DIPHENHYDRAMINE HYDROCHLORIDE
EOSIN (SLIGHT)
ESTRONE
FENNEL FLOURESCEIN DYES
5-FLOUROURACIL
GLYCERYL P-AMINOBENZOATE
GOLD SALTS
GRASS (MEADOW)
GRISEOFULVIN (FULVICIN)
HEMATOPORPHYRIN
HEXACHLOROPHENE (RARE)
HEXACHLOROTHIAZIDE (ESIDRIX)
IMIPRAMINIE HCL (TOFRANIL)
ISOTHIPENCYL (THERUHISTIN)
ISOTHIPENDYL
LADY'S THUMB (TEA)
LANTININ
LAVENDER OIL
LIME OIL
MECLOTHIAZIDE (ENDURON)
MEPAZINE (PACATAL)
9-MERCAPTOPURINE
METHOTRIMEPRAZINE (LEVOPROME) METHOXSALEN (MELOYINE, OXSORALEN)
5-METHOXYPSORALEN
8-METHOXYPSORALEN
MONOGLYCERAL PARA-AMINOBENZOATE MUSTARDS
NALIDIXIC ACID
NAPTHALENE
NORTRIPTYLINE (A VENTYL)
OXYTETRACYCLINE (TERRAMICIN)
PARA-DIMETHLAMINOAZOBENZENE
PARAPHE NYLENEDIAMINE
PARSLEY
PARSNIPS PENICILLIN DERIVATIVES
PERIOLINE
PERPHENAZINE)TRILAFON)
PENANTHRENE
PHENAZINE DYES
PHENOLIC COMPOUNDS
PHENOTHIAZINES (DYES, METHYLENE BLUE)
PHENOXAZINES
PHENYLBUTAZONE (BUTAZOLIDIN)
PHENYTOIN (DILANTIN)
PITCH AND PITCH FUMES
PORPHYRINS
PROCHLORPERAZINE
PROMAZINE HYDROCHLORIDE
PROFRIPTYLINE
PSORALENS
PYRATHIAZINE HYDROCHLORIDE
PYRIDINE QUINETHAZONE (HYDROMOX)
QUYININE ROSE BENGAL PERFUME
RUE
SALICYLANILIDESSALICYLATES
SANDALWOOD OIL (PERFUME)
SILVER SALTS
SMARTWEED (TEA)
STILBAMIDINE ISETHIONATE
SULFACETAMIDE SULFADIAZINE
SULFADIMETHOXINE
SULFAGUANIDINE
SULFANILAMIDE (SLIGHT)
SULFAMERAZINE
SULFAMETHANIZINE
SULFAPYRIDINE
SULFATHIAZOLE
SULFONAMIDES
SULFAISOMIDINE (ELKOSIN)
SULFONYLUREAS (ANTIDIABETICS)
TETRACHLORSALICYLANILIDE
TRETACYCLINES THIAZIDES (DIURIL, HYDRODIURIL)
THIOPHENE
THIOPROPAZATE DIHYDROCHLORIDE
TOLBUTAMIDE (ORINASE)
TOLUENE
TRIBROMOSALICYLANILIDE (TBS)
TRICHLORMETHIAZIDE (METHAHYDRIN) TRIDIONE
TRIETHYLENE MELAMINE (TEM)
TRIFLUPROMAZINE HYDROCHLORIDE (VESPRIN)
TRIMEPRAZINE TARTRATE (TEMARIL)
TRIMETHADIONE (TRIDIONE)
TRIPYRATHIAZINE
TRYPATLAVINE
TRYPAN BLUE
VANILLIN OILS
WATER ASH
XYLENE
YARROW

Components

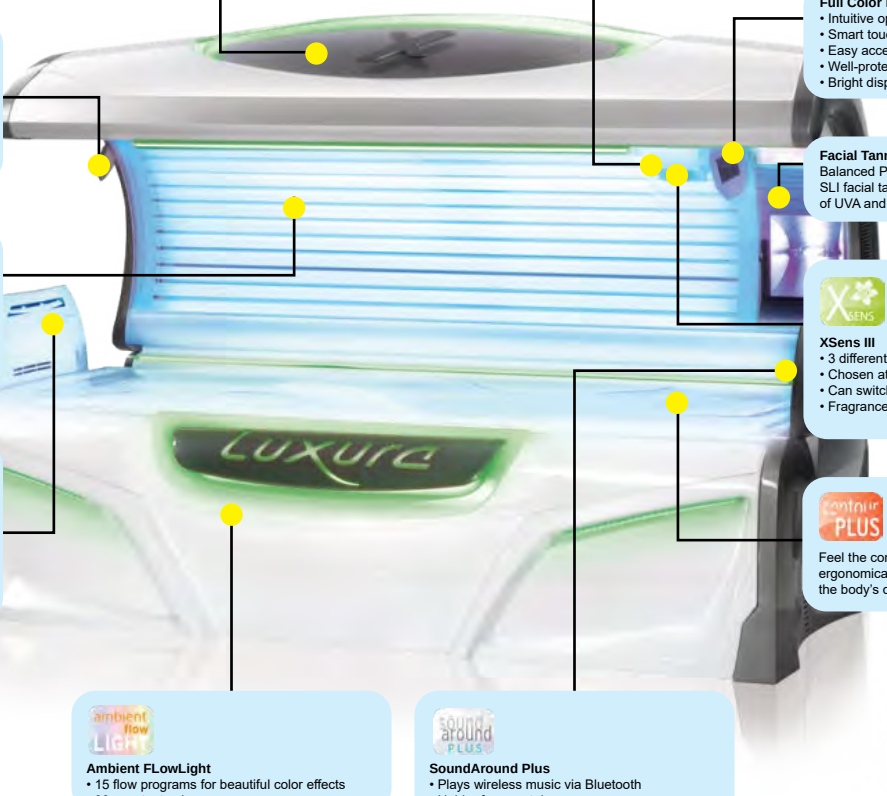

Air Extraction
Luxura X7 comes standard with two air exhaust pipes. As an option it is possible to combine the two exhaust pipes into one by using the air exhaust T-joint. With the optional air exhaust jacketing, the pipes can be elegantly hidden from public views.

Facial Cooler
- Delivers air conditioned to the facial area.
- Adjustable direction of air flow
- Adjustable direction of air flow

Full Color Display
- Intuitive operating System
- Smart touch menu
- Easy access on the inside of the canopy
- Well-protected by acrylic sheet
- Bright display-easy to read with goggles on

QSens
With QSens, a gentle refreshing mist keep users across the body at intervals,feeling fresh while they tan.

Facial Tanners
Balanced Power System - a special filter for the SLI facial tanner that provides a perfect balance of UVA and UVB up to the optimal tanning level.

XL Light
The XL Light extra long lamps, which have a length of two meters, ensure an even, all-over tan.

XSens III
- 3 different fragrances
- Chosen at start of session
- Can switch fragrance during session
- Fragrances: Ocean, Blossom, Sandlewood

CliMax
Climax, the Luxura air-conditioning system, ensures a pleasant temperature as you tan. A refreshing breeze – adjustable at different levels – gently touches body and face.

Feel the comfort of ContourPlus – the bed's ergonomically formed surface, designed to follow the body's curvature

Ambient FLowLight
- 15 flow programs for beautiful color effects
- 30 constant colors

SoundAround Plus
- Plays wireless music via Bluetooth
- Holder for smartphone
- W-LAN connection for internet radio, etc.
- 2 pre-installed SD cards
- Comes standard with MP3 and SmartVoice

The tanning device consists of 2 main sections, the canopy and the bench.

In the diagram above, the different components have been outlined and described. Not all components are available in every country.

Device Description

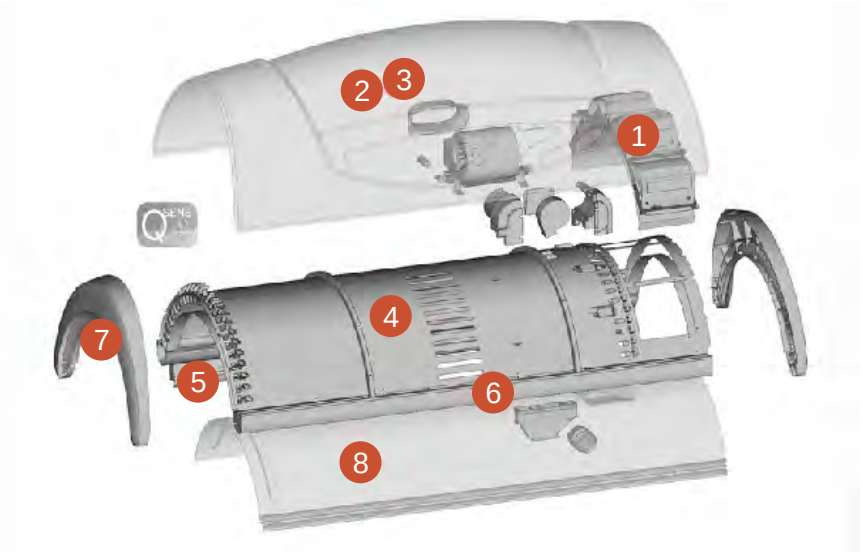

Luxura X7

1. Facial Lamps
2. Qsens Option
3. Top cover plate
4. Canopy
5. Ambient Flow DecoShield
6. Side bars
7. End caps
8. Canopy Acrylic

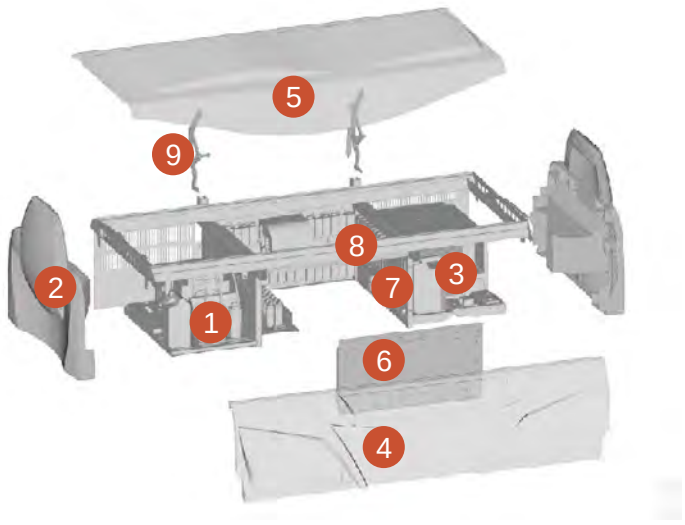

1. Xsens and Qsens Option
2. End Cap with Cooling
3. Optional A/C
4. Front panel with Ambient FlowLight
5. Bench Acrylic
6. Electronics Hatch
7. Ballasts
8. Bench Frame
9. Hinges

Options for Device

The below items are options for this device and may not be included in your unit.
These options do not affect the normal functioning of your device.

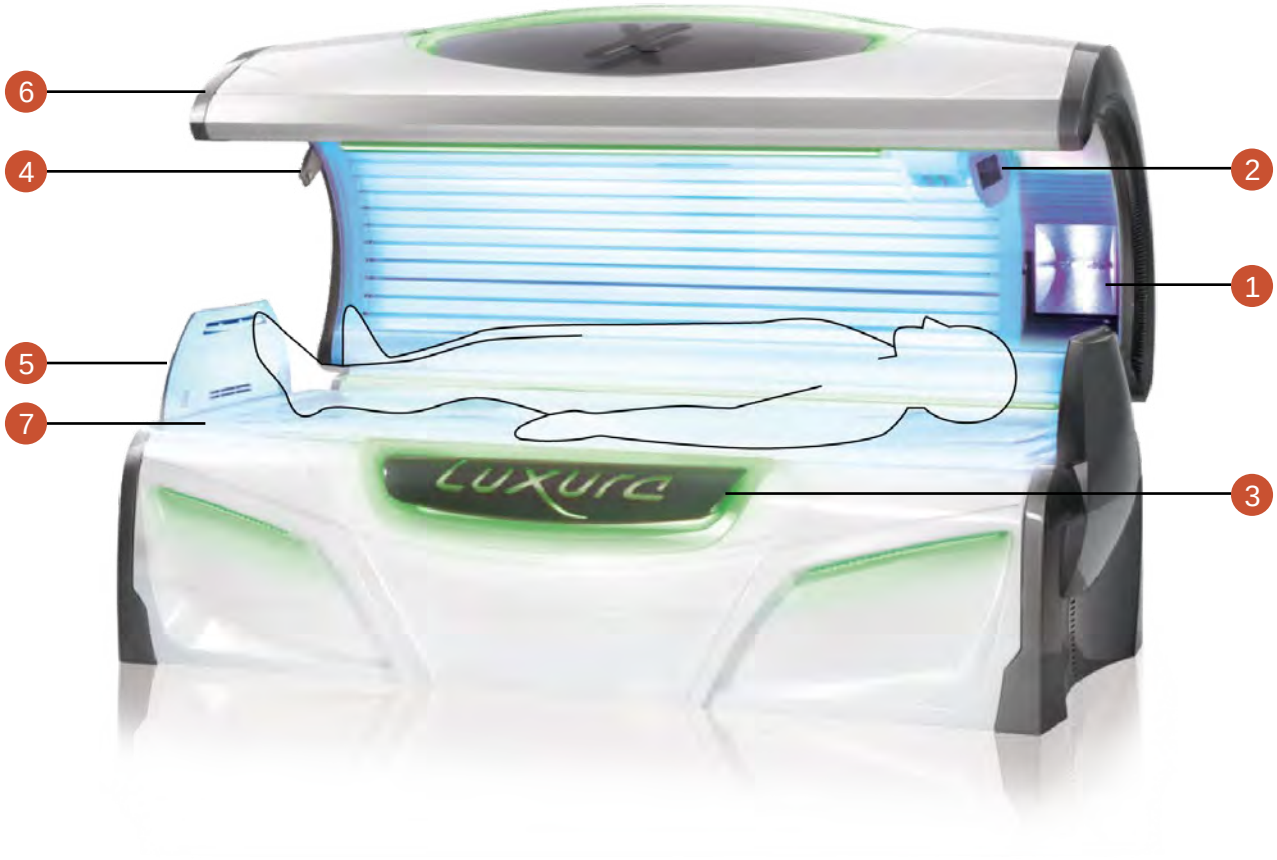

1. Facial Tanners
2. Touch screen display
3. Ambient FlowLight
4. QSens
5. Xsens Aromatherapy
6. Body Cooling
7. A/C option

Lamp configuration- The use of non approved UV Lamps voids the warranty!

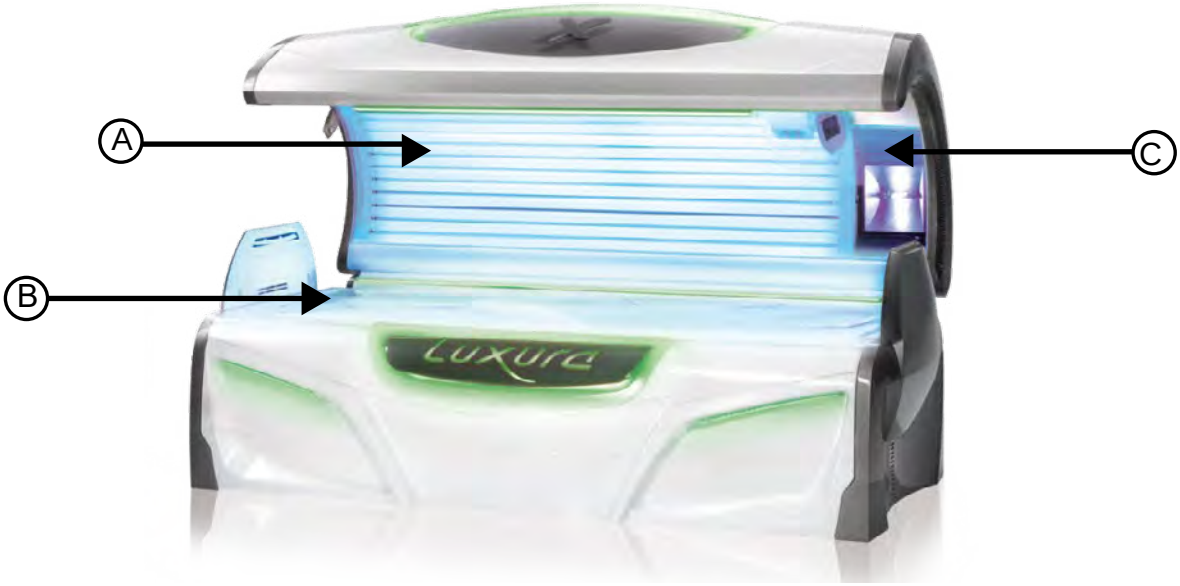

Luxura X7					
	Quantity	**Name**	**Length**	**Watts**	**Part Number**
A	24	Protech II High Intensive R-UVA 200W Plus	71" inches	200W	LAMP7670131
B	18	ProTech II High Intensive R-UVA 200w XL Plus	79" inches or 2 Meters	200W	LAMP7670137
C	4	Protech HP 400		400W	LAMP5002270

Luxura X7 - Spare parts	
Acrylic Bench	ACRY7823665
Acrylic Canopy	ACRY7819600
Acrylic Airco	ACRY8507193
Goggles	ACCE2501629

Dimensions

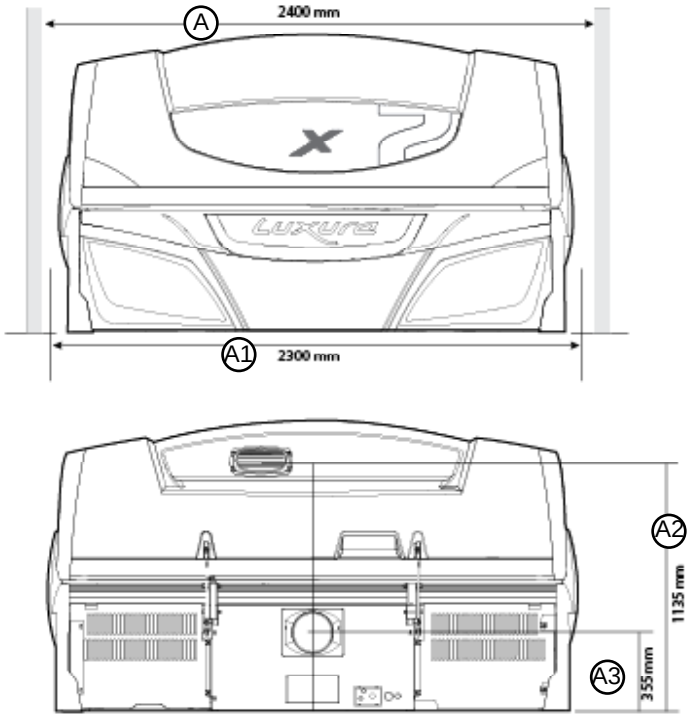

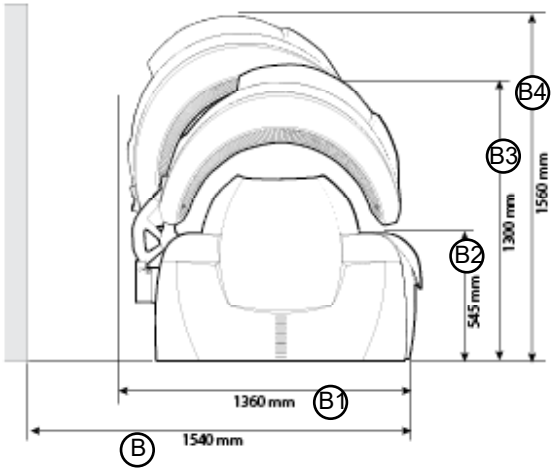

A = 94.48 inches
A1 = 90.55 inches
A2 = 44.68 inches
A3 = 13.97 inches

B = 60.62 inches
B1 = 53.54 inches
B2 = 21.45 inches
B3 = 51.18 inches
B4 = 61.14 inches

Recommended Room Size
The below room size is a recommendation for optimal tanning output.

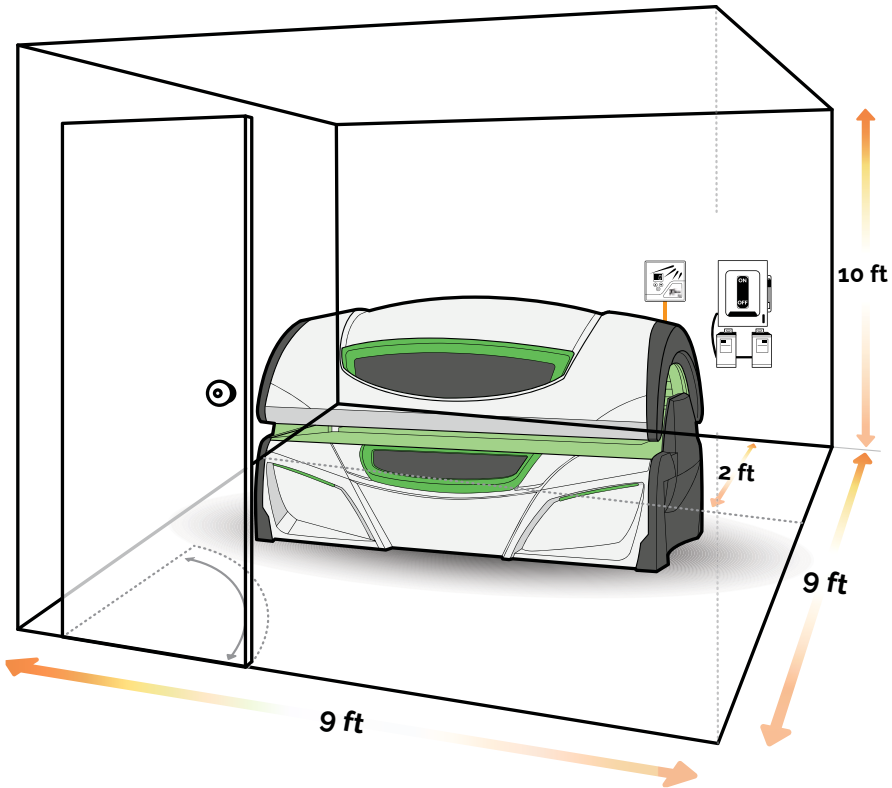

Signs and Labels on the Equipment

The signs and labels below give important information on components on the equipment. Be sure to always have these labels on your equipment, if they become ilegible or are missing contact ProSun for replacement. Labels on units are differently sized than in descriptions below. Each label is listed in the following pages for clear description of what is written on each label.

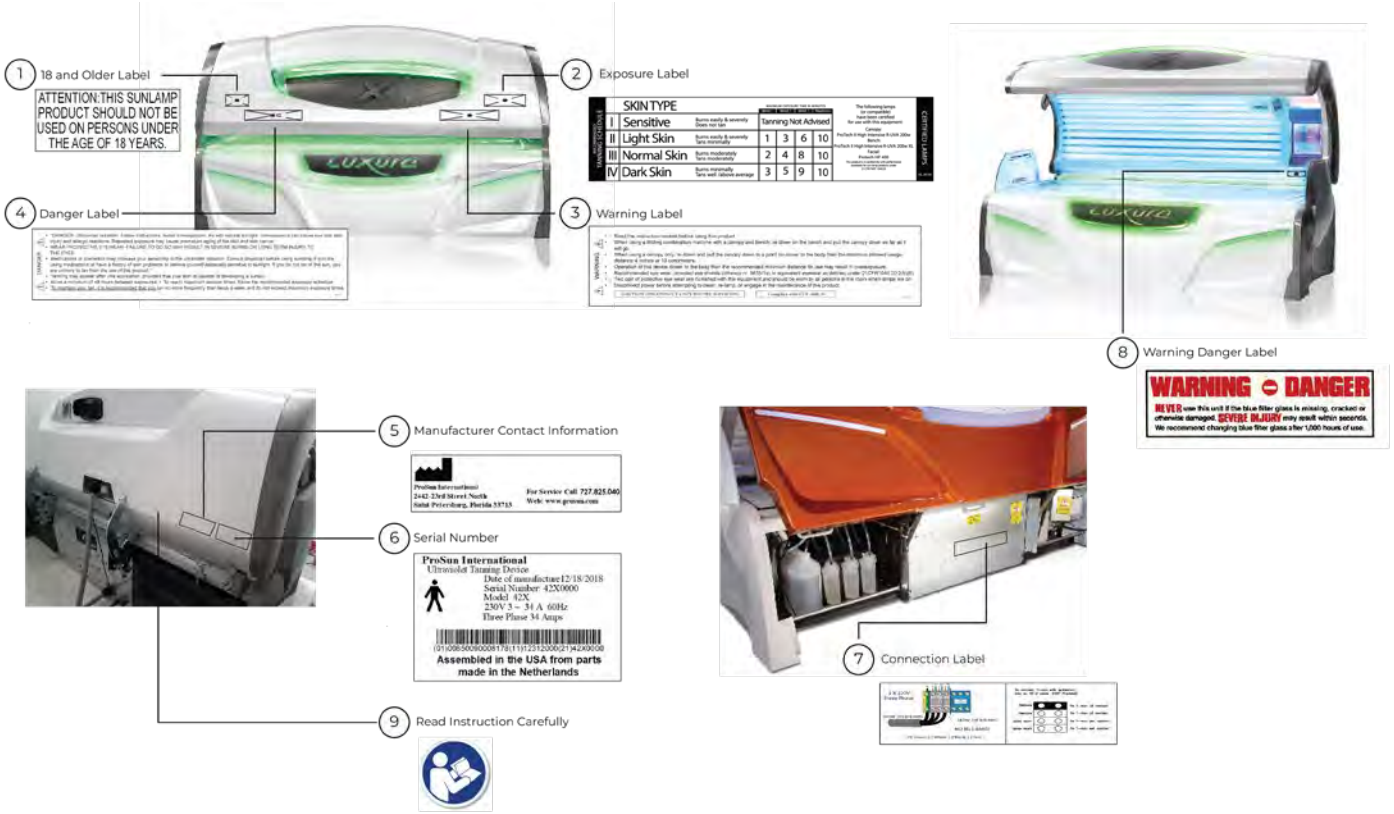

1. 18 and Older Label
Age warning label stating no one under the age of 18 should use this product. This label is located on the front of the unit visible to the user.

ATTENTION:THIS SUNLAMP PRODUCT SHOULD NOT BE USED ON PERSONS UNDER THE AGE OF 18 YEARS.

2. Exposure Label
This label is located on the front of the unit on the door panel, visible to the user.

RECOMMENDED TANNING SCHEDULE

SKIN TYPE			MAXIMUM EXPOSURE TIME IN MINUTES			
			Week 1	Week 2	Week 3	Maximum
I	Sensitive	Burns easily & severely Does not tan	Tanning Not Advised			
II	Light Skin	Burns easily & severely Tans minimally	1	3	6	10
III	Normal Skin	Burns moderately Tans moderately	2	4	8	10
IV	Dark Skin	Burns minimally Tans well /above average	3	5	9	10

The following lamps
(or compatible)
have been certified
for use with this equipment:
Canopy:
ProTech II High Intensive R-UVA 200w
Bench:
ProTech II High Intensive R-UVA 200w XL
Facial:
Protech HP 400
This product is in conformity with performance standards for sun lamp products under 21 CFR PART 1040.20

CERTIFIED LAMPS
X5_34/16

3. Warning Label
This label is located on the front of the unit on the door panel, visible to the user.

4. Danger Label
This label is located on the front of the unit on the door panel, visible to the user.

WARNING

- Read the instruction booklet before using this product.
- When using a folding combination machine with a canopy and bench, lie down on the bench and pull the canopy down as far as it will go.
- When using a canopy only, lie down and pull the canopy down to a point no closer to the body then the minimum allowed usage distance 4 inches or 10 centimeters.
- Operation of this device closer to the body than the recommended minimum distance for use may result in overexposure.
- Recommended eye wear; provided eye shields (Intrexco nr. 5635/1s) or equivalent eyewear as defined under 21CFR1040.20.2(b)(6).
- Two pair of protective eye wear are furnished with this equipment and should be worn all persons in the room when lamps are on.
- Disconnect power before attempting to clean, replamp, or engage in the maintenance of this product.

CAUTION DISCONNECT
UNIT BEFORE SERVICING

Complies with CFR 1040.20

DANGER

- "DANGER - Ultraviolet radiation. Follow instructions. Avoid overexposure. As with natural sunlight, overexposure can cause eye and skin injury and allergic reactions. Repeated exposure may cause premature aging of the skin and skin cancer.
- WEAR PROTECTIVE EYEWEAR -FAILURE TO DO SO MAY RESULT IN SEVERE BURNS OR LONG TERM INJURY TO THE EYES.
- Medications or cosmetics may increase your sensitivity to the ultraviolet radiation. Consult physician before using sunlamp if you are using medications or have a history of skin problems or believe yourself especially sensitive to sunlight. If you do not tan in the sun, you are unlikely to tan from the use of this product."
- Tanning may appear after one application, provided that your skin is capable of developing a suntan.
- Allow a minimum of 48 hours between exposures.
- To reach maximum session times, follow the recommended exposure schedule.
- To maintain your tan, it is recommended that you no more frequently than twice a week and do not exceed maxiumum exposure times.

5. Manufacturer Contact Information
Contact information for service or questions. This label is located on the back of the unit on the center column.



6. Serial Label
The serial label is located on the back of the unit and is the identifier for the unit. This includes the serial number and conformity marking. The below is a sample serial label, please check your equipment for your equipment specifications.



7. Warning Danger Label
Warning Danger label is located on the deco shield of the unit.



8. Connection Label
This label is located on the back of the unit where the power goes into the unit and explains the different connection options for the electrical.

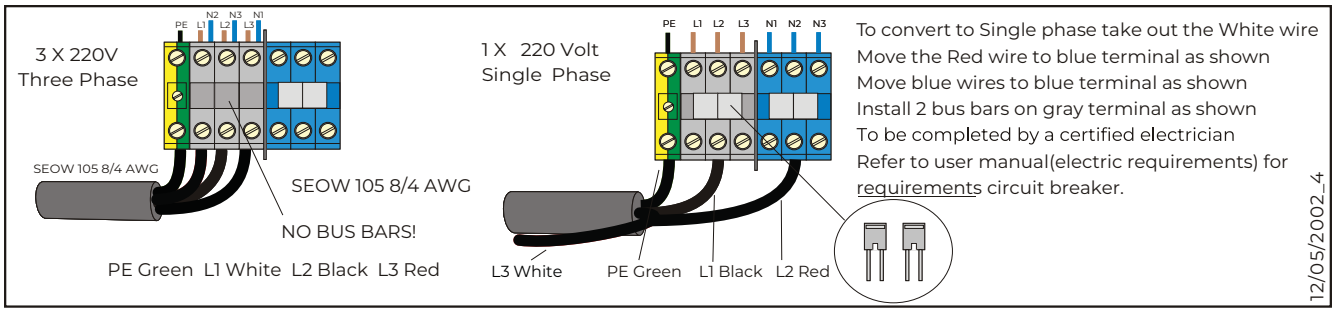

9. Read Information Carefully
This label is located on the back of the unit close the serial label.



Technical Data

Electrical Specifications

Luxura X7	
Power consumption rating:	34 Amp
Electrical Rating:	230V 3~ 34A 60Hz
Rated Fuses:	40 amp 3-pole
Continuous Operation:	Continuous operation for a maximum of 10 minutes.
Classification:	Type B Applied Parts 
Ingress protection classification:	IP20
Protection against electric shock:	Class I ME Equipment
Noise level inside the device:	71 DBC
Noise level 1m away from the device:	62 DBC
Load on the base plate:	Max 250lbs or 113 Kg
Equipment Weight:	Approx 970 lb or 439 kg
Operating Humidity:	30-75%
Ambient Operating temperature:	50 to 104 degrees Farenheit 10 to 40 degress Celcius
Max. operating altitude (above sea level):	<6500 ft (2000m)
Max surface temperature	146.6 degrees Farenheit 63.7 degrees Celcius



Note: If operating this equipment at altitudes above 6500 ft / 2000m above sea level adaption may be needed to get normal operation.

Important Notice:

- Never operate this machine when the ambient room air temperature is greater than 90 degrees Fahrenheit. Never operate this machine when it is not ventilating itself properly (too hot inside).
- This device may not be used by people with reduced physical, sensory or mental capabilities or who have insufficient epxerience and/or knowledge without supervision. A person responsible for their safety must make sure, either by supervision or instruction, tha tthe deivce is used correct and safely. If there is any doubt about the above mentioned instructions then that person cannot use this device.
- Never operate this machine when it is not ventilating itself properly (too hot inside).
- Portable RF Communications Equipment including antennas, can affect ME Equipment. Such equipment should be used no closer than 12 inches (30 cm) to any part of the ME Equipment, including cables specified by the manufacturer.
- Portable RF communications equipment (including peripherals such as antenna cables and external antennas) should be used no closer than 30 cm (12 inches) to any part of the [ME EQUIPMENT or ME SYSTEM], including cables specified by the manufacturer. Otherwise, degradation of the performance of this equipment could result.
- The salon owner or operator may never, under any circumstances, open the bench or canopy of tanning units without the supervision of an authorized service person.

CAUTION: Please refer to your individual unit for the recommended exposure schedule and proper exposure times for the model that you have purchased.

The Electrical requirements for your ProSun unit are:

Model	Breaker	Volts	Hertz	Operating Amps 3
Luxura X7	40 Amp	230V 3~	60 Hz	28-35 Amp

Operating any 230 Volt combination at voltage levels below 218 Volts or above 230 Volts for the ProSun Units constitutes an automatic NULLIFICATION of the manufacturers factory warranty, because it could cause damage to the unit's system.

Please insure that your electrician and/or installer, reads this user's manual carefully prior to the installation of your ProSun unit. You will need a buck booster if voltage requirements are not met. Service personnel should be authorized by ProSun to perform work on equipment and should have knowledge of equipment and read the full manual.



WARNING: Always disconnect the ProSun unit from its power supply when serving or repairing the unit.

WARNING: Mains circuit breaker is used as a means of disconnect.

Electrical Connections

DANGER!

Live Components
Risk of fatal injury due to electrical shock when touching live parts.

WARNING!

Risk of electrical Shock
To avoid the risk of electrical shock, this equipment must only be connected to a supply mains with protective earth.

Both the power supply and the related connection work must comply with national standards. The connection work and replacement of the power supply cord must be done by a certified electrician or technician. The connection to the 3 pole 230V mains must be protected by maximum over current protection. For Canada a Class-A ground fault circuit (GFCI) has to be used. Any equipment outside of the US and Canada needs to comply to their countries standards.

Connection Requirements
There must be an emergency disconnect to turn off the unit in the room.

The tanning device is by default set up in single phase wiring, but can be wired for 3-phase wiring upon placing the order. It can be changed in the field as well by a certified electrician or technician.

WARNING!

WARNING: Cable length must never exceed information below.

Description	Port Type	Type of Cable	Cable Length	Fixing Shield	Load at Port	Max Cable Length	Note
AC Mains	AC 3 Phase Mains	Unshielded	3m	Not Applicable	Hot Wired	N/A	-
Coin Automat Cable	I/O	Unshielded	3m	Not Applicable	Manual Switch	<3m	-

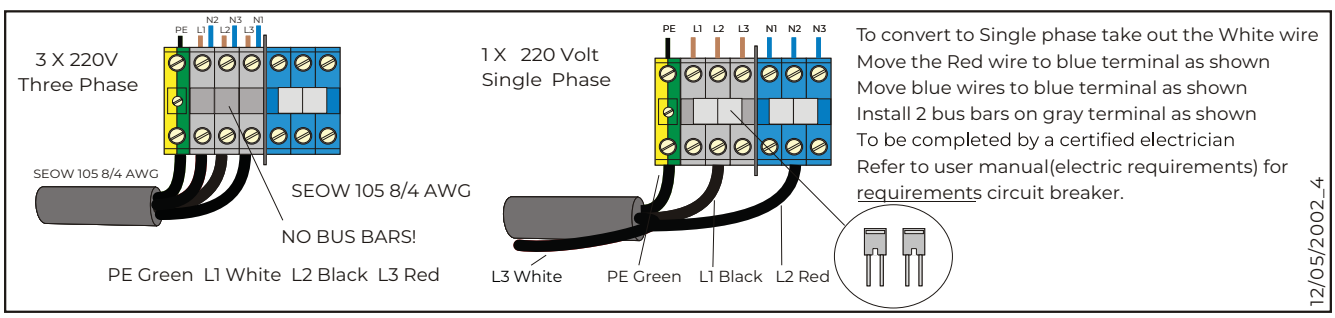

Connecting Equipment to External Timer

(T-Max Timers are sold Separated)

OPTION 1

Connecting T-Max system to the unit using the Wall Mount Enclosure
In the Case that you have to install the T-max systems using the wall mount enclosure follow these steps.

1. Locate the two Cables in the back of the unit; these will be label as “J3 Contact” and “EXT Start” these are standard 18/2 Wires. Cut the Zip ties.

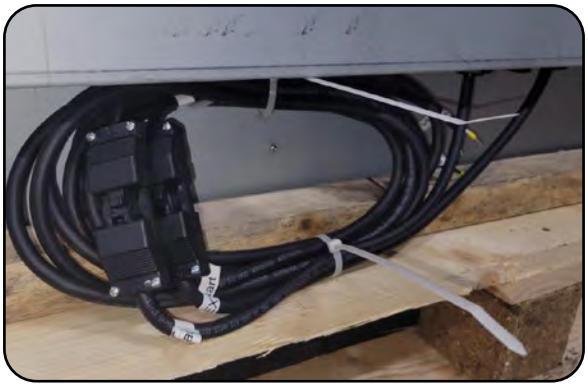

1.1. The End of the wires will be Labels “J3 Contact” and “EXT Start”

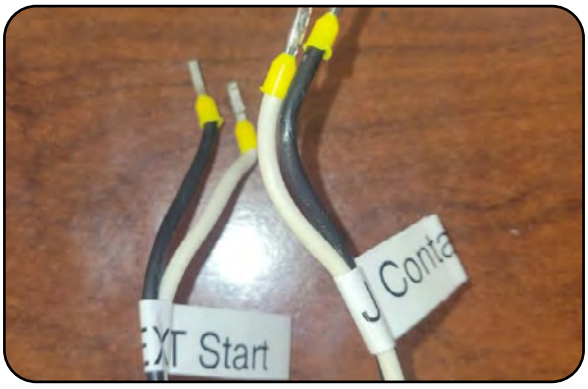

2. Attach the T-max 3W Flush mount to the Wall mount enclosure using the screw that comes with your T-max.

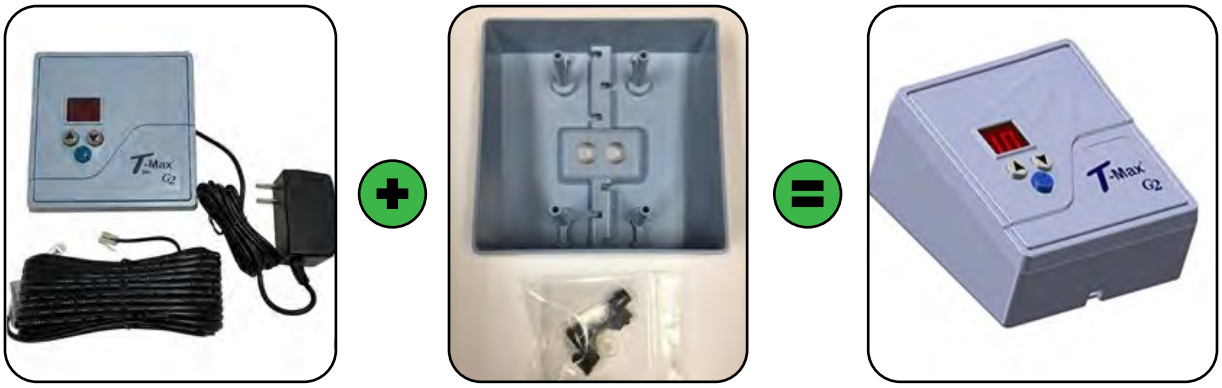

2.1. Remove the POWER cable, using a small flat head screw driver

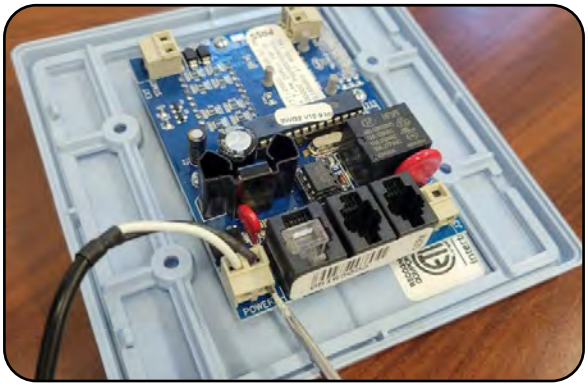

2.2. Separate the T-max Face plate from the internal frame.



2.3. Using the screws coming with the T-max attach the plastic enclosure

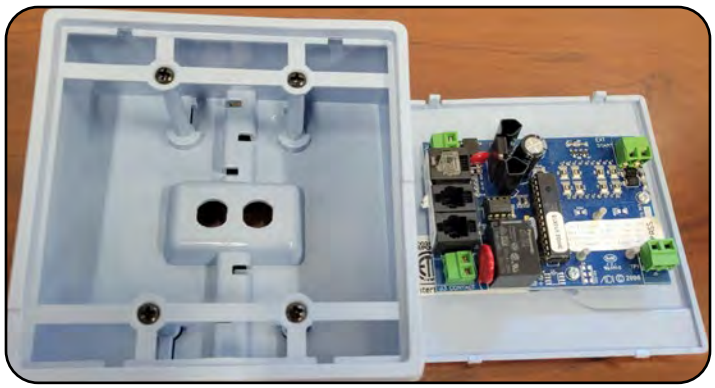

3. Trace cables on the back of the mount enclosure

3.1. Using the two holes on the back of the T-max enclosure past these cables.

3.1.1. J3 Contact – Coming from the unit
3.1.2. EXT Start - Coming from the unit
3.1.3. Power Cable – Coming with the T-max
3.1.4. Communication Cables

3.1.4.1. If the equipment will be set up as a Daisy chain: There should be 2 communication cables (rj-22)
3.1.4.2. If the equipment will be set up as a Wireless with the access point: There should be 1 communication cables (rj-11)

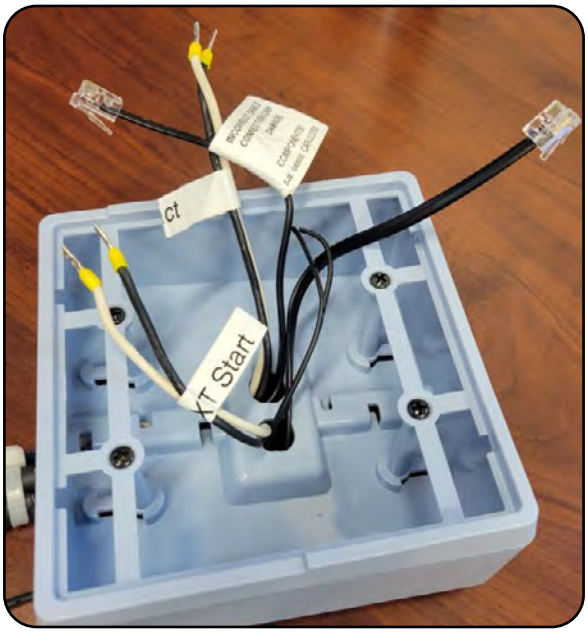

4. Connect all the Cables and wires to the correspond position in the T-Max.
    4.1. See Bellow diagram and Pictures

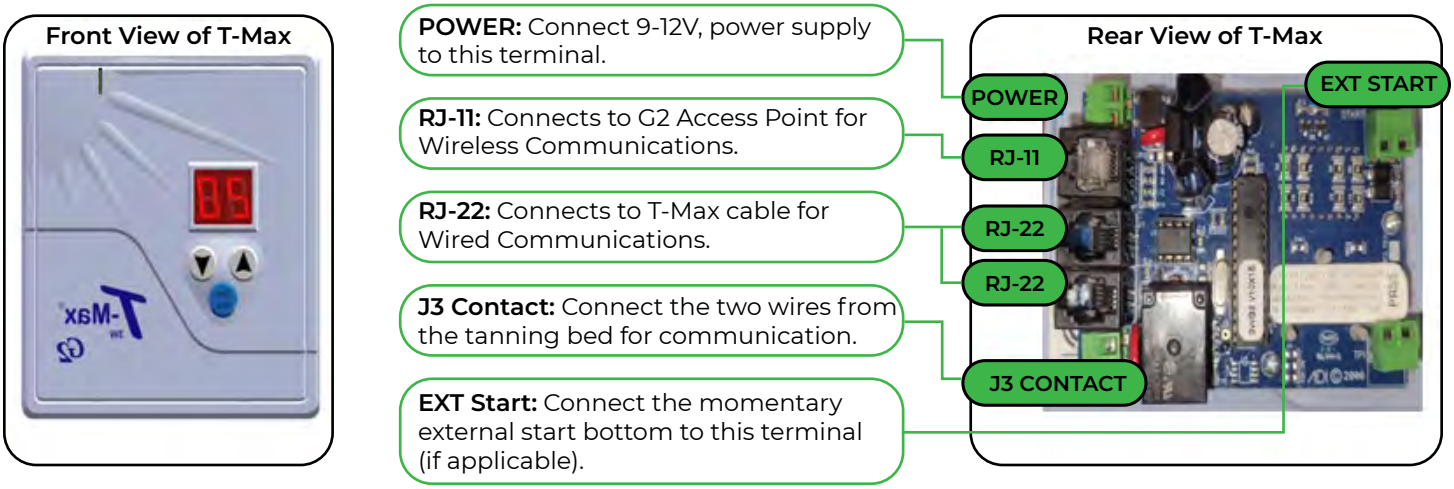







4.2. After All Wires are connects to the t-max mare sure to properly secure with zip ties

4.3. Finally close the face plate lip and install T-max box on the wall.







OPTION 2

Cables for T-max had been run trough the wall and the T-max is already connected.

5. In the Case that all the Cables (RJ-2, J3 Contact and EXT Start), had been previously run inside the walls and the T-max is already install you will need to follow this steps.

   5.1.1. Make sure the wires are securely fastened and not exposed

5.2. Located and label the wires “J3 Contact” and “EXT Start”, coming out of the T-max.

5.3. You will need to connect these wires to the ones coming out of the unit.



5.4. Unscrew the male connectors coming from the unit and connect the wires coming from the wall using a small flat head Screw driver.





Tanning Bed Standards

FILL IN STANDARDS INFORMATION HERE

This tanning equipment is in conformity with performance standards 21 CFR 1040.20 and the standards for electromagnetic compatibility (EMC):
IEC 60601-1-2 (2014)

Guidance and Manufacturer's Declaration - Electromagnetic Emissions		
The Luxura X7 is intended for use in the electromagnetic environment specified below. The customer or the user of the Luxura X7 should assure that it is used in such an environment		
Emmission tests	Compliance	Electromagnetic environment - Guidance
RF emissions according to CISPR 11	Group 1	The Luxura X7 uses RF energy only for its internal function. Therefore, its RF emissions are very low and are not likely to cause any interference in nearby electronic equipment.
RF emissions according to CISPR 11	Class A	The Luxura X7 is suitable for use in all establishments excluding domestic establishments and those directly connected to the public low voltage power supply network that supplies buildings used for domestic purposes.
Harmonic emissions IEC 61000-3-2	Not Applicable	
Voltage fluctuations IEC 61000-3-3	Not Applicable	

Guidance and Manufacturer's Declaration - Electromagnetic Immunity			
The Luxura X7 is intended for use in the electromagnetic environment specified below. The customer or the user of the Luxura X7 should assure that it is used in such an environment.			
Immunity Test	IEC 60601 Test Level	Compliance Test	Electromagnetic Environment - Guidance
Electrostatic discharge (ESD) IEC 61000-4-2	±2 kV, ±4 kV & ± 8 kV for Contact Discharge ±2 kV, ±4 kV, ±8 kV and± 15kV for Air Discharge	±2 kV, ±4 kV & ± 8 kV for Contact Discharge ±2 kV, ±4 kV, ±8 kV and± 15kV for Air Discharge	Floors should be wood, concrete or ceramic tile. If floors are covered with synthetic material, the relative humidity should be at least 30%.
Electrical fast transient/ burst IEC 61000-4-4	±2kV for power supply lines ±1kV for input/output lines	±2kV for power supply lines ±1kV for input/output lines	Mains power quality should be that of a typical commercial or hospital environment.
Surge IEC 61000-4-5	AC Mains Line to Ground ±0.5kV, ±1kV and ±2kV AC Mains Line to Line ±0.5kV and ±1kV	AC Mains Line to Ground ±0.5kV, ±1kV and ±2kV AC Mains Line to Line ±0.5kV and ±1kV	Mains power quality should be that of a typical commercial or hospital environment.
Voltage dips, short interruptions and voltage variations on power supply input lines IEC 61000-4-11	<5% UT (100% dip in UT) for 0.5 cycles 0% UT (100% dip in UT) for 1 cycle 70% UT (30% dip in UT) for 25/30 cycles <5% UT (100% dip in UT) for 250/300 cycles	<5% UT (100% dip in UT) for 0.5 cycles 0% UT (100% dip in UT) for 1 cycle 70% UT (30% dip in UT) for 25/30 cycles <5% UT (100% dip in UT) for 250/300 cycles	Mains power quality should be that of a typical commercial or hospital environment. If the user of the Luxura X7 requires continued operation during power mains interruptions, it is recommended that the Luxura X7 be powered from an uninterrupted power supply or a battery.
Power frequency (50/60Hz) magnetic field IEC 61000-4-8	30 A/m	30 A/m	Power frequency magnetic fields should be at levels characteristic of a typical location in a typical commercial or hospital environment.
NOTE: UT is the a.c mains voltage prior to application of the test level.			

Guidance and Manufacturer's Declaration – Electromagnetic Immunity Non life supporting ME Equipment			
The Luxura X7 is intended for use in the electromagnetic environment specified below. The customer or the user of the Luxura X7 should assure that it is used in such an environment.			
Immunity Test	IEC 60601 Test Level	Compliance Level	Electromagnetic Environment – Guidance
Conducted RF IEC 61000-4-6	AC Mains 3V with 6V ISM 80% AM at 1 kHz 150 kHz – 80 MHz	AC Mains 3V with 6V ISM 80% AM at 1 kHz 150 kHz – 80 MHz	Portable and mobile RF communications equipment should be used no closer to any part of the ProSun Tanning Equipments, including cables, than the recommended separation distance calculated from the equation applicable to the frequency of the transmitter. Recommended separation distance $d = [\frac{3,5}{V_1}]\sqrt{P}$ $d = [\frac{3,5}{E_1}]\sqrt{P}$ 80 MHz to 800 MHz $d = [\frac{7}{E_1}]\sqrt{P}$ 800 MHz to 2,5 GHz where P is the maximum output power rating of the transmitter in watts (W) according to the transmitter manufacturer and d is the recommended separation distance in metres (m). Field strengths from fixed RF transmitters, as determined by an electromagnetic site survey,a should be less than the compliance level in each frequency range.b
Radiated RF IEC 61000-4-3	3V/m, 80% AM at 1 kHz 80 MHz – 2700 MHz	(E1) = 3V/m	
NOTE 1 At 80 MHz and 800 MHz, the higher frequency range applies. NOTE 2 These guidelines may not apply in all situations. Electromagnetic propagation is affected by absorption and reflection from structures, objects and people			
a Field strengths from fixed transmitters, such as base stations for radio (cellular/cordless) telephones and land mobile radios, amateur radio, AM and FM radio broadcast and TV broadcast cannot be predicted theoretically with accuracy. To assess the electromagnetic environment due to fixed RF transmitters, an electromagnetic site survey should be considered. If the measured field strength in the location in which the "Product Name" is used exceeds the applicable RF compliance level above, the "Product Name" should be observed to verify normal operation. If abnormal performance is observed, additional measures may be necessary, such as reorienting or relocating the "ProSun Tanning Equipments. b Over the frequency range 150 kHz to 80 MHz, field strengths should be less than [V1] V/m.			

Recommended separation distances between portable and mobile RF communications equipment and the Luxura X7 model Non life supporting ME Equipment

The Luxura X7 is intended for use in an electromagnetic environment in which radiated RF disturbances are controlled. The customer or the user of the Luxura X7 can help prevent electromagnetic interference by maintaining a minimum distance between portable and mobile RF communications equipment (transmitters) and the Luxura X7 as recommended below, according to the maximum output power of the communications equipment.

Rated maximum output power of transmitter W	Separation distance according to frequency of transmitter m		
	150 kHz to 80 MHz $d = [\frac{3,5}{V_1}]\sqrt{P}$	80 MHz to 800 MHz $d = [\frac{3,5}{E_1}]\sqrt{P}$	800 MHz to 2,7 GHz $d = [\frac{7}{E_1}]\sqrt{P}$
0.01	0.12	0.12	0.23
0.1	0.37	0.37	0.74
1.0	1.2	1.2	2.3
10	3.7	3.7	7.4
100	12	12	23

For transmitters rated at a maximum output power not listed above, the recommended separation distance d in meters (m) can be estimated using the equation applicable to the frequency of the transmitter, where P is the maximum output power rating of the transmitter in watts (W) according to the transmitter manufacturer.
NOTE 1 At 80 MHz and 800 MHz, the separation distance for the higher frequency range applies.
NOTE 2 These guidelines may not apply in all situations. Electromagnetic propagation is affected by absorption and reflection from structures, objects and people.

Before your tanning session

Check for any conditions mentioned in the manual that may prevent you from using the tanning equipment.

Make-up and cosmetics
Do not wear make-up when tanning. Clean skin absorbs the UV Light properly. Remove all make-up prior to tanning. Make-up clogs the pores in your face. The UV light from a tanning device re-opens these clogged pores. A wide variety of components and materials are found in make-up and cosmetics. These materials in conjunction with UV radiation can cause skin allergies so you should always remove make up prior to tanning.

Jewelery
Remove all jewelery prior to tanning, including piercings.

Hair and loose items
Any loose hair should be tied back using a hair tie. Any loose items on clothing should be secured.

Medications
Some medications increase the skin's sensitivity to UV light. The probability is especially high with antibiotics, sulphonamids, psychiatric drugs, tranquilizers, anti-diabetes treatments and diuretics. Sun creams which contain psorale or kumarin also may increase skin sensitivity. If you are unsure consult your doctor prior to using the equipment!

Contact Lenses
You do not need to remove your contact lenses prior to tanning but you must like all other users wear the protective goggles. The protective goggles protect your eyes against UV radiation. If you wish to have better protection you can contact your optician for exchange contact lenses with UV protection. These contacts are not just for tanning equipment but for UV light from the sun as well, consult your optician for more questions.

Showering and hydrating the skin
You cannot wash off a tan from a tanning device, unlike with spray tanning the the browning is in the skin and it will not wash off. It is recommended that you arrive for your session with clean and dry skin. Prior to your session you can apply tanning lotion. We recomend treating your skin to a moisturizing cream after showering after your session.

After the tanning session

Cleaning
All parts of the equipmnent that come in contact with the user must be cleaned and disinfected after each session. Cleaning is part of basic care that can be performed by qualified staff or service personnel.

Infections can be transferred through skin contact. The following items should be cleaned after each session:

- Goggles
- base plate
- acrylics
- handles
- control panel
- Mp3 components
- Only approved tanning bed cleaner should be used, such as Lucasol One step. Use of any incorrect tanning bed cleaner will void the warranty. Use only EPA registered quaternary ammonium germicidal based detergent solution. Always follow the product label for dilution instructions.

Cleaning Acrylics:
Do Not clean or rub with a dry cloth as it may cause scratches!
Non-approved cleaning agents should not be used, especially products including lysoform, ethyl alcohol or other liquids containing alcohol. **If used the warranty will be voided!**

ProSun® recommends the use of Lucasol One Step when cleaning acrylic sheets. Acrylics in tanning equipment are extremely porous and should not be cleaned/disinfected with non-approved products.

Acrylics should be cleaned after every use, even though they do not always come in direct contact with the user. If the user does touch the acrylic and those marks are left for a period of time, combined with the heat and light fromt he tanning lamps those marks can become permanent.

To clean the acrylics you should follow the instructions on the bottle. Never spray the solution directly onto the acrylic. Always spray a cloth and apply the cleaner, then use a clean dry cloth to make sure the acrylic is fully dried before the next session.

Operation of Equipment

Obligations of the business operator

- As the business operator you are responsible for informing the user of the risks of tanning.
- All danger and safety labels should be attached to the equipment and clearly visible to the user. You should not remove these labels at any time!
- No safety devices(i.e. temperature sensors) may be removed, deactivated or otherwise bypassed from the equipment, as it can cause safety issues and impair the proper functioning of the equipment.
- The equipment may only be used when in proper operating conditions.
- It is the business operators responsibility to ensure the tanning system is handled properly.

Staff Training

As a business operator you are required to train your personnel by ensuring that they have read and understood this user manual and all labeling on the equipment, and can properly operate the equipment and instruct them in the established legal and accident prevention regulations. Ensure that your staff is properly trained and understand how to use the equipment and that they observe all these instructions. This includes:

- Information regarding intended use and forseeable misuse of the equipment.
- Safety Instructions
- Operating Instructions
- Cleaning/Disinfection and maintenance instructions.

Please make sure the instructions and any additional information from the manufacturer, such as manuals, are avaialble to the staff at their workplace.

Regularly check that your staff is conscious of the safety rules and are aware of the risks of imporper use of this equipment.

Ensure that equipment is properly cleaned/disinfected per the intervals set forth in the manual.

Ensure that your staff is providing the users with proper advice, in particular regarding the exposure times, operation of the equipment and possible risks for misuse.

How to operate the equipment

Prior to operating the equipment check that the unit has been cleaned and check for any damage to the acrylics.

No other people should be in the vicinity of the equipment when in use, especially no children under the age of 18. This device should be used by 1 person at the time.

Patient should remain upright while tanning, do not sit down.

Choosing the correct exposure time:
Make sure you check the exposure sticker on the front of the bed to match your skin type, not following the recommended exposure time may cause sunburn.

SKIN TYPE I - This individual burns easily and should NOT tan.
SKIN TYPE II - This individual burns easily and severely and should tan minimally.
SKIN TYPE III - This individual burns moderately and tans moderately.
SKIN TYPE IV - This individual burns minimally and tans well/ above average.

RECOMMENDED TANNING SCHEDULE

SKIN TYPE			MAXIMUM EXPOSURE TIME IN MINUTES			
			Week 1	Week 2	Week 3	Maximum
I	Sensitive	Burns easily & severely Does not tan	Tanning Not Advised			
II	Light Skin	Burns easily & severely Tans minimally	1	3	6	10
III	Normal Skin	Burns moderately Tans moderately	2	4	8	10
IV	Dark Skin	Burns minimally Tans well /above average	3	5	9	10

The following lamps
(or compatible)
have been certified
for use with this equipment:

Canopy:
ProTech II High Intensive R-UVA 200w
Bench:
ProTech II High Intensive R-UVA 200w XL
Facial:
Protech HP 400

This product is in conformity with performance standards for sun lamp products under 21 CFR PART 1040.20

CERTIFIED LAMPS

X5_34/16

Normal Equipment Operation and software

Before turning on the equipment make sure you have proper warning signs at your location. We recommend permanently placing a Warning sign on the wall close to the tanning bed such as the one below:

> **WARNING**
>
> •UV Radiation can cause eye and skin damage as well as skin aging and possibly skin cancer. Ask the staff for further information.
> •Wear protective eye goggles.
> •Certain medicicines or cosmetics can increase the sensitivity of the skin to UV radiation. If in doubt consult your physician.

Operating Modes:
There are 4 different operating modes for this equipment.

Standby Mode
The tanning bed is in an idle state, it is connected to the power but is currently not in use. The UV lamps in the unit are not turned on at this time. While in Standby mode you can change to Tanning mode by starting a session or go into service mode by entering into the parameters.

Tanning Mode
The tanning bed is in use and the UV lamps are on. The session time is counting down and can be stopped, paused or features can be changed in the control panel.

Cool down Mode
The tanning bed has finished the tanning session and now will start a mandatory cool down. During this time the cool down time will be displayed in the control panel and the buttons have no function if pressed. The bed must complete the mandatory cool down before being able to enter into any other operating mode.

Service Mode
In service mode the tanning bed parameters can be changed and the bed can be configured as needed.

Tanning Mode
The following description is for a unit that has all possible features, some of these features may not be available for your unit or market.

DANGER!
Excessive dose of UV radiation
Excessively prolonged tanning sessions may cause severe damage to skin and eyes.

- Never operate tanning deivce with a defective timer.
- Observe the tanning times given in the exposure sticker based on your skin type.

Starting the tanning session
The tanning session will automatically begin after the external timer delay time has expired. During the preset delay time the tanning ession can be started by manually pressing the START button (2) on the control panel, thereby overriding the delay time.

If you do not override the delay time then you will have a few minutes to prepare yourself for the session.

- Remove all clothes and jewelery
- Remove make-up and cosmetics
- Put on tanning lotions(if applicable)
- Remove glasses, contacts can be worn under goggles.
- Put on protective goggles.
- Close the tanning device
- Stand upright in the center of the tanning device facing the doors.

If you are ready prior to the delay time being open you can override the delay by hitting the START/ STOP button.

Operation during the tanning session
During the tanning session the features can be used by pushing the buttons on the control panel. You can push the feature you wish to use (i.e. the fan button (5) followed by the increase button (3) or decrease button (4)).

Note: 20 seconds after your last input the control display screen will go back to the session time. You can change the features at any time by pushing the button of the feature you wish to activate.

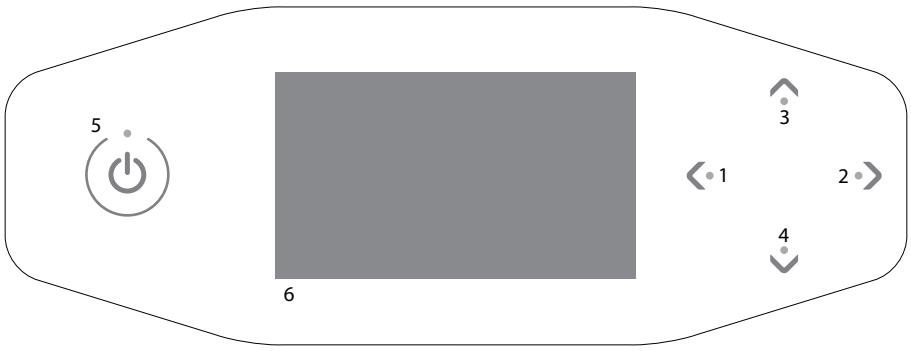

Stopping the Tanning Session
If the time in the session runs out naturally then the unit will go into a 3 minute cool-down. However if you need to stop the tanning session prior to end of the sesion you can do so by hitting the START/STOP Button.

To pause the tanning session you can hit the START/STOP button once.
Then to completely stop the tanning session prior to the end of our session time hit the START/STOP button twice and the unit will go into Cool-down mode.

Standby Mode
When the unit is in standby mode, you can change the decorative lighting on the tanning device.

Customer Concerns
Failure to use protective eyewear may result in severe burns or other eye injury. If discomfort develops, stop using the tanning equipment immediately and seek medical advice from your physician.

- Do not continue to use the tanning device if unexpected effects, such as itching, occur within 48 hours after the first tanning session. Seek medical advice immediately!
- The tanning unit must never be used if a facial filter is damaged or missing, or if the timer on the unit is defective.
- UV light from the equipment or the sun can cause injuries to the skin or eyes. This biological effect is dependent on the sensitivity of a users skin and on the type of UV light they are receiving. Users should follow the tanning exposure schedule on the unit and in the manual.
- As with natural sunlight, overexposure can cause eye and skin injury, sunburn or allergic reactions.
- If user is taking medications or has cosmetics on their skin, sensitivity may increase to UV light.
- A person with a history of skin problem should always consult a physician prior to tanning.

Always seek medical advice if in doubt!
Sometimes people using the tanning device will experience a slight reddening of the skin. This is usually in small patches and after the second or third tanning session. This redness can be accompanied by an itching sesation. This may just be a slight heat rash caused by the heat from the lamps within the device. It should be gone in about 24 hours. This feeling and reddening can be minimized or avoided by applying moisturizer to the affected area and/or used after the tanning session is complete.

- Always follow instructions and exposure schedules
- The time between the first two tanning sessions must be at least 24 hours.
- You may eventually reach a tanning plateau, at this point your skin will not get darker without edangering your health. You should never overexpose yourself with the tanning unit.
- Users should be properly informed on how to use the tanning equipment.

Storing the Device

Decommissioning your tanning unit
The equipment must be disconnected from the power in order to temporarily or permanently decommision it. You must follow legal disposal requirements when you are going to permanently dispose of your unit.

Storage
Store the equipment in a dry, frost free location with a stable temperature. Once the device has been unplugged from the power supply, allow it to completely cool before packaging it for storage. You can use plastic wrapping to protect against scratching. We recommend using moving blankets surrounded by plastic wrap.

Storage temperature can be between 5 °F (-15 °C) and 140 °F (+60 °C)

- Let equipment sit for at least 2 hours if range was outside of ambient temperature range.



Disposal
There are environmental regulations for disposal of lamps and batteries. UV Lamps contain fluorescent materials and other waste containing mercury. Contact your local health department, local garbage disposal or city authority to find out how to properly dispose of the equipment.

Packaging contains recyclable material.

Waste of electrical and electronic equipment must be disposed as unsorted municipal waste. It must be collected separately, and must be disposed as per local regulations. Contact ProSun International or an authorized representative for information concerning the decommissioning of your equipment.

Control Functions

Not all options shown below are applicable on this device and in the US Market.



#	Function	Description	Additional Information
1	Left Arrow	Left selection arrow allows you to scroll left to the option you need	
2	Right arrow	Right selection arrow allows you to scroll left to the option you need	
3	Up arrow	scroll up in the selected option	Increase arrow
4	Down Arrow	Scroll down in the selected option	Decrease arrow
5	Start/Stop	Switches the UV lamps on and off during session.	Hit stop once to pause the session and hit stop twice to end session.
6	Display	Display shows the options you are selecting	

Control Without an External Timer or Coins

Indicator Lights:
All indicator lights will be on the display of the unit and will show green when ready to use or for selection purposes.

The machine is set up for standard use with an external timer or a coinbox. If the machine must function without the external timer or coinbox, i.e. with the internal timer, the required tanning time will have to be adjusted according to the following procedure.

Coin-operated mode without remote start
The machine will be started automatically if there is no 'remote start' present on the external timer or coin unit. The 'remote start' can be configured by your dealer.

Coin-operated mode with remote start
Press ⏻ 1x to start the machine.

Stand-alone mode
Press ⏻ 1x.
The tanning time (start time) is shown on the display. The tanning time can be changed with the ^ and v buttons.
Press ⏻ 1x to confirm the set time. The machine is switched on and the tanning time begins.



After setting the tanning time, hold ⏻ for 3 seconds to return to the standby screen. If no button is pressed for 1 minute, the machine will return to the standby screen automatically.

Pause mode
Press ⏻ 1x during tanning to put the machine in pause mode. The lamps are switched off. The body cooling remains on (maximum 4 minutes). Xsens (optional) and Qsens (optional) are paused.

Coin-operated mode
The tanning time continues to be shown at the top of the display and 'Press ⏻ to restart' appears at the bottom.
Press ⏻ 1x during pause mode to restart the tanning appliance.



Stand-alone mode
The remaining tanning time continues to be shown at the top of the display and 'Press ⏻ to restart' and 'Hold button 3 seconds to end the session' appear alternatingly at the bottom.
Press ⏻ 1x during pause mode to restart the tanning appliance or hold ⏻ for 3 seconds to switch off the tanning appliance. This ends the tanning session, and the required cool down period begins.

Note:
The tanning time counter keeps running during 'pause mode'.
If the tanning appliance is restarted within 4 minutes after ⏻ is pressed, the face tanners do not go on. The face tanners restart automatically after the required 4 minute cool down period.

Operational Functions

The ❮ and ❯ buttons can be used to select the desired control function. Only the installed options will be shown on the display.

Body cooling The ^ button can be used to increase the cooling on the body. The v button can be used to decrease the cooling on the body. The body cooling can be set to 8 levels. The body cooling cannot be switched off.	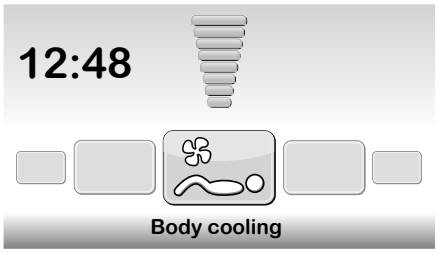
Face cooling The ^ button can be used to increase the cooling on the face. The v button can be used to decrease the cooling on the face. The face cooling can be set to 8 levels.	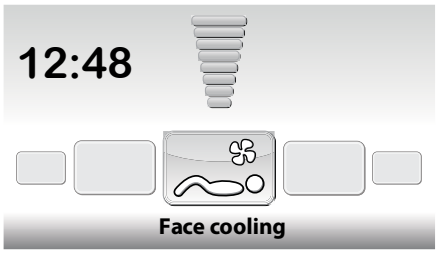
Facial tanner (SLi only) The v button can be used to set the facial tanner(s) to the minimum intensity. The ^ button can be used to set the facial tanner(s) to the maximum intensity. The value appears at the top of the display and the text 'Facial tanner' appears at the bottom. Hold the v button for 3 seconds to switch off the facial tanner Once the facial tanner is switched off, it must first cool down for 3 minutes before it can be restarted. The remaining cool down time is shown on the right side of the display.	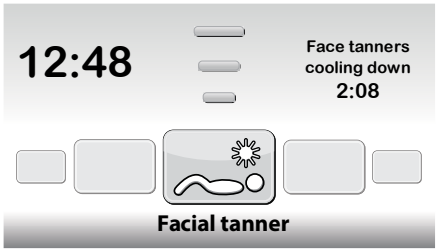
Facial tanner (SPr only) The v button can be used to set the facial tanner(s) to the minimum intensity. The ^ button can be used to set the facial tanner(s) to the maximum intensity. The value appears at the top of the display and the text 'Facial tanner' appears at the bottom. To switch off the facial tanner press v until "Off" appears on the screen.	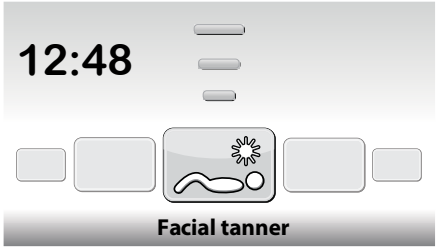

Air conditioning (optional)

The button is used to switch on the air conditioning. On/Off appears at the top of the display and the text 'Air Conditioning' appears at the bottom. This switches on during each tanning session by default.
Hold ⌄ the button for 3 seconds to switch off the air conditioning.
Once the air conditioning is switched off, it must first cool down for 3 minutes before it can be restarted.
The remaining cool down time is shown on the right side of the display.

If the text 'Air conditioning service' appears on the right side of the display, the air conditioning will not function. For information about what to do when this fault message appears, see the 'Messages' chapter in this manual.

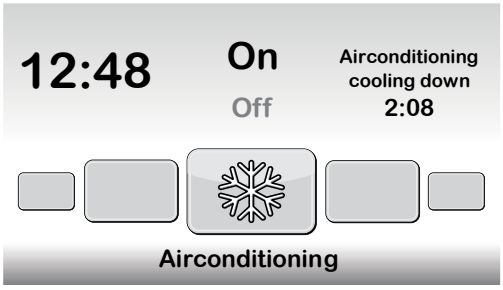

Qsens (optional)

The ⌃ button is used to switch on the Qsens (water mist is sprayed at 2 minute intervals during tanning).
The ⌄ button is used to switch off the Qsens
On/Off appears at the top of the display and the 'Qsens' appears at the bottom.
This switches on during each tanning session by default

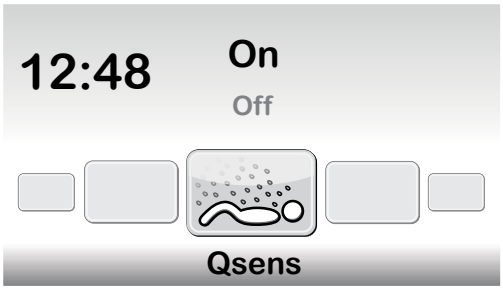

Xsens (optional)

Xsens I
The ⌃ button is used to switch on the Xsens. The ⌄ button is used to switch off the Xsens. The value appears at the top of the display and the text 'Xsens' appears at the bottom.

Xsens III
When multiple Xsens scents are available, the scent is shown on the right side of the display.
The ⌃ button can be used to select the next scent.
The ⌄ button can be used to select the previous scent.
To switch off the Xsens, press ⌄ until 'Off' appears on the screen.

This switches on during each tanning session by default.

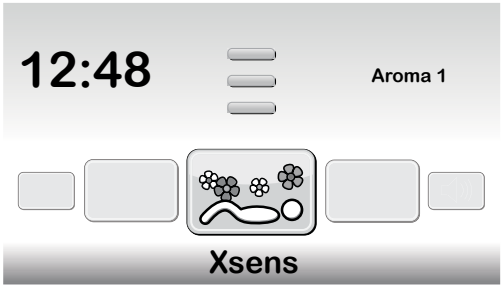

Operational Functions

The ❮ and ❯ buttons can be used to select the desired control function. Only the installed options will be shown on the display.

Music channel selection
(with sound system only)

The desired music channel can be selected with the ^ and v buttons. Only available music channels are shown.

If all the music channels are connected, a choice can be made from the following channels:
'My MP3' and studio channel 1 through 6

If a SoundAround system is connected, the software will detect it automatically. The associated buttons will be activated.

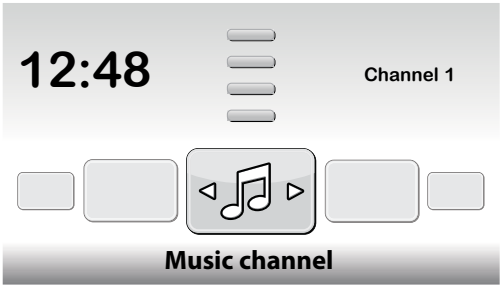

Switch song (with sound system only)

If 'Channel 1' or 'Channel 2' is selected, the 'switch song' function will be activated.
The ^ button can be used to select the next song.
The v button can be used to select the previous song.

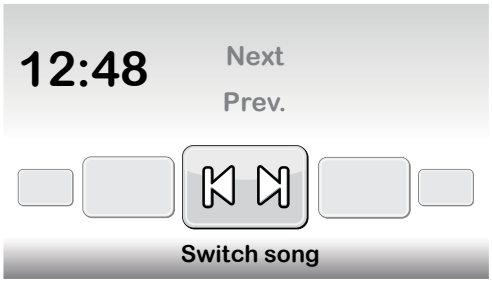

Music volume (with sound system only)

Use ^ to increase the volume of the speakers.
Use v to decrease the volume of the speakers.
The text 'Volume' appears at the bottom of the display.

The volume can be set to 8 levels.

When the tanning session starts this is set to '4' by default.



PARAMETERS MENU

Hold the ^, < and > buttons for 10 seconds.
Enter the PIN code; it is set to 0000 by default. Press ⏻ to confirm.

Parameters

The tanning appliance can be set to your preferences by changing the parameters shown here. The parameters that are not shown in the table may only be changed by your dealer.

Use the ^ and v buttons to navigate to the desired submenu and use > to select it.
Use the ^ and v buttons to navigate to the desired parameter and use > to select it.
Use the ^ and v buttons to change the value.

If you want to save the new value, press >; the text 'OK' is selected and the text 'Press ^ to confirm' appears at the bottom of the display. Press ^ to confirm. The value is saved and you now return to the submenu.

If you do not want to save the new value, press <; the new value is not saved and you now return to the submenu. Press < to return to the main menu.

Press ⏻ to exit the parameter menu. If no button is pressed for 1 minute, you automatically return to the stand-by screen.

1. Unit		
1. Start time (minutes)	0 = Coin unit / >0 = Stand-alone	Default = 0 (Coin unit)
2. Maximum time		
4. Power facial lamps		
5. Standby screen		
6. Time light on	Time at which the decorative lighting is switched on	Default = 07:00
7. Time light off	Time at which the decorative lighting is switched off	Default = 23:00
8. Unit time	Current machine time	Default = 00:00
9. Unit date	Current machine date	Default = 01-01-2012
12. Parameter code	Unique code for entering the parameter menu	Default = 0000
13. Clean time (minutes)	The length of time the display is switched off for cleaning	Default = 01:00
15. Backlight intensity		
2. Lamp Hours		
1. Unit Hours		
2. Useful life lamp (1)		
3. Lamp Hours (1)		
4. Lamp Hours (1) reset		
5. Hour Counter (2) active		
6. Use life lamp (2)		
7. Lamp hours (2)		
8. Lamp hours (2) reset		
9. Useful life lamp (facial)		
10. Facial hours		
11. Facial hours reset		

3. Smart Cooling		
1. Wind sensor check		
2. Bench temperature		
3. Maximum temperature bench		
4. Coolor type bench		
5. Canopy temperature		
6. Maximum temperature canopy		
7. Cooler type canopy		
8. P - value coolers		
9. I - value coolers		
4. Body Cooling		
1. Body fan at start	Speed of the body fan at the beginning of the session	Default = 1
2. Step 1		
3. Step 2		
4. Step 3		
5. Step 4		
6. Step 5		
7. Step 6		
8. Step 7		
9. Step 8		
5. Head fan		
1. Head fan at start	Speed of the head fan at the beginning of the session	Default = 1
2. Step 1		
3. Step 2		
4. Step 3		
5. Step 4		
6. Step 5		
7. Step 6		
8. Step 7		
9. Step 8		
6. Xsens		
2. Number of Xsens cartridges	Number of installed Xsens cartridges	Default = 1
3. Xsens at start	Xsens scent at the beginning of the session (0=off)	Default = 0
4. Xsens at standby	Xsens scent during the stand-by period (0=off)	Default = 0

7. Audio		
16. Stand-by volume	Music volume during the stand-by period (0=off)	Default = 0
17. Stand-by channel	Music channel during the stand-by period	Default = 1
18. Start volume	Music volume at the beginning of the session (0=off)	Default = 4
19. Start channel	Music channel at the beginning of the session	Default = 2
7. Airco		
1. Airco at start	State of the airco at the beginning of the session	Default = On
8. Qsens		
1. Qsens at start	State of the Qsens at the beginning of the session	Default = On
3. Qsens initialization	Bleeding of the Qsens system	Default=Off
10. Deco light		
1. Effect	Color program	Default = 1
	0 = single color (see color sub: 4. color number)	
	1 = all colors	
	2 = base colors quickly	
	3 = base colors slowly	
	4 = shades of white	
	5 = soft colors	
	6 = shades of white (base white)	
	7 = shades of red, orange and yellow	
	8 = shades of purple and pink	
	9 = shades of red	
	10 = shades of orange	
	11 = shades of yellow	
	12 = shades of green	
	13 = shades of blue	
	14 = shades of purple	
	15 = shades of pink	
2. Effect speed	Speed at which the color programme cycles (1-20)	Default = 10
3. Deco light at start	Decorative lighting at the beginning of the session	Default = Off
4. Color number	Color	Default = 27



NOTE - We highly recommend that you change the factory PIN to a personal PIN and that you save it somewhere that you will not forget or lose it.

Reading the hour counters and software

Status Menu

Hold the ⌄, ❮ and ❯ buttons for 5 seconds.
You now see the 'Quick status menu'.
The hour counters and software versions can be viewed here.

Resetting the hour counters

Navigate to '2. Lamp hours' or '3. Facial tanner hours' and press ❯.
Enter the PIN code and press ⏻.
The hour counters are reset.



MAINTENANCE

Cleaning

The tanning appliance is equipped with a touch panel control. To prevent accidental operation of the machine during cleaning, you can temporarily switch off the control. It is also recommended that you temporarily switch off the control before you open the acrylic screen canopy.

Hold ⌃ and ⌄ for 5 seconds.

The display shows the remaining time + 'Cleaning'. During this period the display cannot be operated.
The time you have to clean the machine can be changed. The standard cleaning time is 1 minute.



Cleaning the air conditioning (option)

Clean the air conditioning as explained in the instructions that accompanied your air conditioning unit.
You must reset the service date after cleaning.

To reset the service date while a fault message is displayed, press ❯ to enter the 'Quick status menu'. From the standby screen, hold the ⌄, ❮ and ❯ buttons for 5 seconds to enter the 'Quick status menu'.

Navigate to 'Airco service date' and press ❯.
Enter the PIN code and press ⏻.
The airco service date is increased by 6 months.

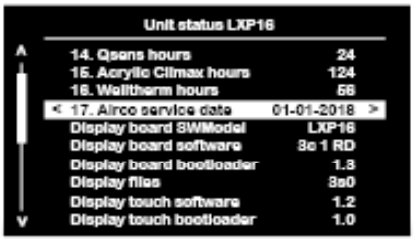

Replacing the Qsens (option) liquid jug

Never refill your Qsens liquid jug with regular tap water or any other liquid. Replace with an original Hapro Qsens liquid jug. Remember to order the Qsens liquid jugs in time.
Before Qsens can be used for the first time or after replacement of the liquid jug, the system must be bled of air.

Hold the ⌃, ❮ and ❯ buttons for 10 seconds.
Enter the PIN code; it is set to 0000 by default. Press ⏻ to confirm. You are now in the parameter menu.

Navigate to '09 - Qsens' and press ❯.
Navigate to '03 - Qsens initialization' and press ❯.
Press ⌃ to start the initialization.
Wait until the Qsens nozzles produce a fine mist of water.
Press ⌄ to stop the initialization.
Press ⏻ to exit the parameter menu. Your Qsens set is now ready for use.



Error messages

Malfunction

When a malfunction occurs, the buttons ^, v, < and > flash when the machine is in standby. The machine also produces 3 rapid beeps once every minute. Press all four of the buttons at the same time to see which fault or faults have occurred.
If a critical fault occurs, the malfunction screen appears automatically. The text 'Malfunction' appears at the top of the screen, and the fault code and an explanation appear at the bottom. Use the ^ and v buttons to view the various fault messages. For faults E18, E19, E20 and E21 you can exit the malfunction screen with the < or ⏻ button.



Critical errors

E1 = Internal timer has a defect
E2 = Fan in bottom tray has a defect
E3 = Communication error between relay and switch part
E6 = Unknown phase
E7 = Relay failure
E9 = Maximum temperature bench
E10 = Maximum temperature canopy
E11 = Communication error with fan board

Errors

E18 = Communication error with bench temperature sensor
E19 = Communication error with canopy temperature sensor
E20 = Air conditioning reservoir full
E21 = Clean air conditioning

NOTE:
When one of the above-mentioned critical faults appears on the display, you should no longer use the tanning appliance and the plug should be removed from the mains outlet. Contact your dealer.

If one of the other faults occurs, the machine will still function, but not all the functions will be fully available. During fault E18 and E19 the machine cooling will run at maximum throughout the entire session. To correct this, contact your dealer.

E20: Air conditioning reservoir full
Check whether the reservoir for the air conditioning is full. If the reservoir is full, you should empty the reservoir (see section 'Emptying air conditioning reservoir' in this manual). The fault message disappears after several seconds. If the fault message does not disappear, contact your dealer.

E21: Cleaning the air conditioning
The air conditioning must be thoroughly cleaned every 6 months. If the air conditioning has not been cleaned within the past 6 months, fault message 'E21: Clean the air conditioning' will appear. You must thoroughly clean the air conditioning. After it has been cleaned, you must reset the 'Airco service date'. For more information, consult the 'Cleaning' section in this manual.



NOTE - When one of the above mentioned errors appears on the display, you should no longer use the tanning unit and you should disconnected it from the mains outlet or plug. Contact ProSun immediately.

Care and Maintenance

The Care and Maintenance in this section provides information on how to properly care for your equipment after each use and during the lifespan of the unit. It will help provide you with basic troubleshooting and maitenance questions. If your tanning bed fails to operate properly, please review the following steps before calling for service.

THE TANNING BED YOU PURCHASED CONTAINS VOLTAGES WHICH ARE POTENTIALLY HAZARDOUS. IN THE FOLLOWING PAGES YOU WILL RECEIVE A CLEAR DESCRIPTION OF WHAT CARE AND MAINTENANCE CAN BE DONE BY A NON-SKILLED PERSON THAT HAS READ AND UNDERSTOOD THE MANUAL AND WHICH REPAIRS AND MAINTENANCES SHOULD BE PERFORMED BY CERTIFIED TECHNICIANS.

FOR YOUR TANNING BED:
Safe and continuous operation of your tanning bed depends partially on the care taken by users. Please observe the following precautions when tanning bed is in use.

- Do not allow sharp object in the bed while in use. Avoid having the acrylic sheets coming in contact with sharp edges or objects.
- Do not allow liquid or any foreign objects to get inside the unit.
- Ensure the back side of the unit is at least 8 to 12 inches from the wall.
- The room in which the unit is located must be well ventilated.
- Make sure the unit never comes in contact with water while connected to power.
- Do not turn the Machine on and off frequently within the space of 3 minutes.
- When replacing or cleaning facial lamps, both facial lenses and the bulbs should be cleaned with alcohol, keeping them free of smudges and finger prints. (only applies to equipment with facial lamps).



DANGER - High Voltage !
You can be killed or injured by an electric shock!
During maintenance and service work there is a risk that you can touch live parts and could receive a fatal shock. When performing basic care maintenance and before a certified technician performs maintenance work they should make sure:

- The device is disconnected from the power supply.
- The device is not in use.
- Do not reach behind the cover plates and do not open the unit while it is switched on.
- Refit and safety devices after work has been completed.

If service or maintenance work is going to be performed on the equipment then they must be deenergized. Meaning that all live cables must be switched off.
Switching off the device alone is not enough, certain points may still be energized. Therefore, switch off fuses before performing any work, if possible also remove these fuses before starting.
Accidental reactivation can result in serious accidents. Immediately after deenergizing the equipment, secure all switches or fuses used for deenergizing against being switched on again.

For more maintenance information please visit our website at:
www.prosun.com/customer-service

Basic Care Maintenance
Basic Care Maintenace and service of your equipment play a major role in maintaining the units performance and appearance over the period of its useful life. Compliance at the intervals specified for your unit are absolutely necessary to ensure the proper operation of the equipment. The table below is a preventative care table that can be done by any unskilled person, if any service outside of this table is needed please contact ProSun immediately and this should only be done by a certified technician.

The equipment should be routinely serviced and maintenanced by a ProSun certified technician.



WARNING!
Injuries and damage due to improper maintenance!
If the maintenance intervals of the UV lamps are not followed or if incompatible UV lamps are installed, harmful UVB radiation may increase. Sunburn and other skin damage may result.

Improper maintenance can cause the unit to become inoperable.

Always comply with the maintenance schedule supplied in this manual and follow cleaning/disinfecting instructions.

NEVER use this unit if the blue filter glass is missing, cracked or otherwise damaged. SEVERE INJURY may result within seconds. (only applies to equipment with facial lamps)

Maintenance Schedule:

Frequency	After Each Session	Daily	Weekly	Every 1 to 3 Months
Cleaning all components in contact with user (MP3 cable, acrylics, goggles, etc)	X			
Unit base, control panel and handles	X			
Click Strips are firmly in place	X			
Clean & Sanitize Bed Exterior		X		
Remove & Clean inside of acrylic sheets				
Dust Lamps				X
Wipe & Vacuum fans & vents			X	
Clean all reflectors				X
Inspect Acrylics for cracks & wear		X		
Check hinges bolts for proper tightness		X		
Inspect vent hoses for optimum ventilation			X	

Lucasol™ 4-Step Cleaning Process



STEP 1
After use, spray the tanning bed with Lucasol™ disinfeectant and sit for 60 seconds to kill 99.99% of bacteria, fungus, and virus.



STEP 2
Wipe the tanning bed surface to remove Lucasol™ and any tanning lotion residue. YThe bed is now sanitized.



STEP 3
Spray the tanning again and let Lucasol™ sit for 10 minutes to achieve 100% disinfection, killing 100% of bacteria, fungus, and virus.



STEP 4
Wipe the remaining Lucasol™ from the surface of the bed. The bed is now disinfected.

Following this 4-Step process will minimize the risk of spreading infectious disease and offer the tanning bed user the best possible results.

*Not all tanning bed disinfectants kill 99.99% of bacteria, virus, and fungus in 60 seconds. If you are not using Lucasol™ read the label on your disinfectant bottle for proper directions.

NOTE:
For thorough cleaning and disinfection, the product you are using has to remain in contact with the surface that is being cleaned and disinfected for a specific amount of time, as mentioned on the instructions of the product. The specifc amount of time will depened on the type of cleaner/disinfectant that you are using. Follow the directions on the product.

The below basic maintenance can be done by an unskilled person.

Cleaning Plastic Surfaces:
For cleaning plastic surfaces we recommend using regular soap and warm water. Never use an aggresive cleaning agent that contains alcohol or essential oils. Using inappropriate cleaners may cause permanent damage not covered by warranty. Remove all jewelery and loose items before cleaning.

Cleaning Lamps:
Low pressure lamps can be cleaned with a damp cloth(without any additional cleaning agents). Dust lamps with a dry soft cloth - do not use cleaning fluid or alcohol.

Cleaning the machine
Always disconnect the main power from the unit before attempting to clean or repair it. Dust the lamps with a dry cloth - do not use cleaning fluid or alcohol. We recommend using Lucasol as the cleaning product. The acrylics should be taken out at least once every week of operation and cleaned thoroughly with a non-alcoholic disinfectant glass or surface cleaner. If alcohol is used, the acrylic may fade, crack, or break altogether. Failure to use anything other than an approved cleaning material on the acrylic will result in poor UV-transmission, and could eventually cause injury to the person using the machine. Use a vacuum cleaner with a dust nozzle to clean around the ballast racks and throughout the interior portions of the base, top deck, and bench.

Maintenance by skilled persons:
ProSun recommends having an annual inspection by a certified technician to review connections, check for lose wiring, check the power cords and review all other high voltage components. At this time the certified technician can dust all electronic components.

Troubleshooting guide

PROBLEM	PROBABLE CAUSE	POSSIBLE SOLUTION
Unit is Activated but nothing happens	• No Power to the unit. • Timer clears after priming • Remote timers do not work. • Incorrect voltage	• Check to see if unit is connected to the power source. • Restart timer and try again. • Check that it is plugged in and contact ProSun customer service for replacement parts. • Get voltage reading from certified technician.
Unit appears to be too hot	• Fans are obstructed • Room is too small	Ensure all fans are clear of obstructions and dust. Check that your room is the correct size as described earlier in the manual.
Room temperature abnormally warm	Tanning unit too close to the wall	Pull unit away from wall at least 10 - 12 inches.
Individual lamps do not light	• Lamps not properly in sockets. • Lamps or starters are defective. • Ballast are defective. • Loose wires • Lamp lifecycle has ended.	• Turn lamp in socket units lamp illuminates. • Replace lamp or starts. • Replace ballast- Must be done by certified technician. • Reconnect wire - Must be done by certified technician.
Facial tanner does not light	• Face tanner switch is turned to “Off” position • Lamp is defective • Switching from “On” to “Off” and back again too quickly	• Turn face tanner switch to On” position, power cycle the unit. • Replace lamp • Wait a few minutes after switching facials back “On” again (approximately 3 minute cool down time)
Unit goes in to ERROR Mode	See setup manual	Contact ProSun customer service
Canopy does not stay open.	Shocks may be damaged	Check shocks are installed per assembly instructions in this manual. Contact ProSun customer service for parts.
Cracked acrylic	Damage to equipment by user or cleaning	Contact ProSun for replacement. Non-skilled person can replace acrylic.



Any troubleshooting outside of the above mentioned guide should be done by a certified technician. Contact ProSun to schedule service with a certified technician.

Replacement of Components



WARNING: Before doing any work on this machine, whether it be an unskilled person or a certified technician, ALWAYS disconnect the power at the main circuit breaker(or, if the main power cable has a wall plug, pull it out).

IMPORTANT: Only use manufacturer-authorized replacement components. Failure to do so may void warranty.

Longevity of the acrylic sheets
The acrylic sheets used in this machine should be changed between 1200 and 1500 hours of operation. If not, UV-transmission could be greatly reduced.

The acrylics for the unit are produced of an acrylic glass developed specifically for tanning sesions. The use of other acrylic material can cause serious injury due to the incorrect passing of UV radiation. The acrylics used in your equipment have a particularly high UV permeabillity and resistance, ensuring that the user receives the correct UV radiation when using the exposure schedule properly.

Longevity of the lamps
Most lamps will display up to 120% of rated output during the first 50 hours of illumination. As such, exposure schedules should be reduced by 20%, or sunburning may occur. After the initial 50 hours, the lamps will run at 100% of their rated output and gradually go down from there, until about 800 hours, where upon the lamps should be replaced.

Disposal of Lamps
Tanning lamps contain fluorescent materials and other waste that contain mercury. Certain areas in the US and Canada have specific regulations on diposal of these wastes, you can contact your health department, local garbage disposal company or city authority to find out where and how to properly dispose of them. You should retain proof of proper lamp disposal.



WARNING!
Risk of mercury toxicity
Risk of mercury toxicity after lamp breakage. Ventilate the room or area at least 15 minutes before disposing of the fragments.

Technical Modifications
This unit has been manufactured in accordance with current safety regulations. The illustrations and specifications are subject to changes in order to improve the device. Unauthorized modifications and changes to the device and its controls are prohibited.

Removing Acrylics

WARNING: Before obtaining access to terminals, all power supply circuits must be unplugged.

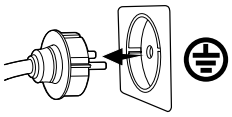

1

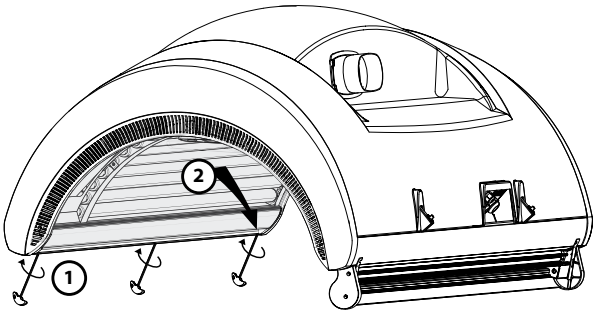

At the end of the bench or canopy you will find an acrylic tool. Remove it from the unit.

2

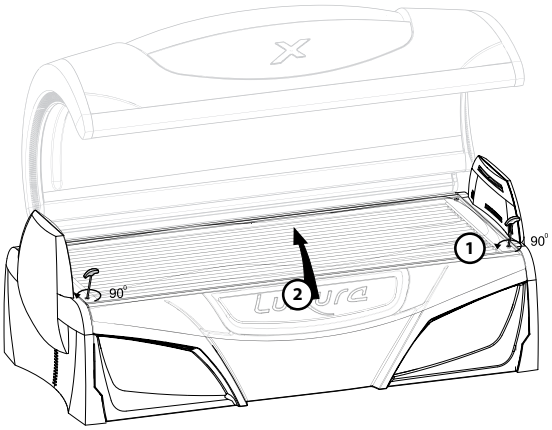

3

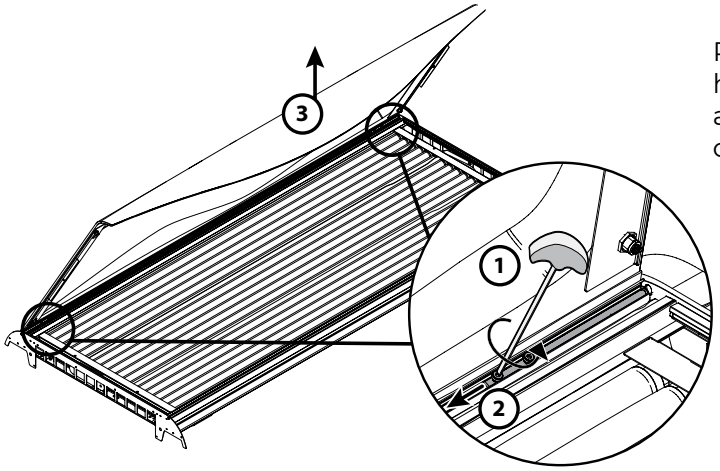

Pull back the acrylic sheet by hand first, and then use the acrylic tool to remove the rest of the sheet.

Replacing the Lamps

Remove acrylics before replacing lamps.

Lamp replacement:
Holding the lamp at both ends, turn it counter-clockwise until the bi-pins can slide easily out of the lamp holder socket, and slowly take it out of the unit. Clicks will be heard as the socket incrementally rotates. Replace the lamp in just the opposite manner, making sure that the labeling on the lamp itself is pointed outward, and that you have heard 2 clicks to ensure the lamps are securely fastened.

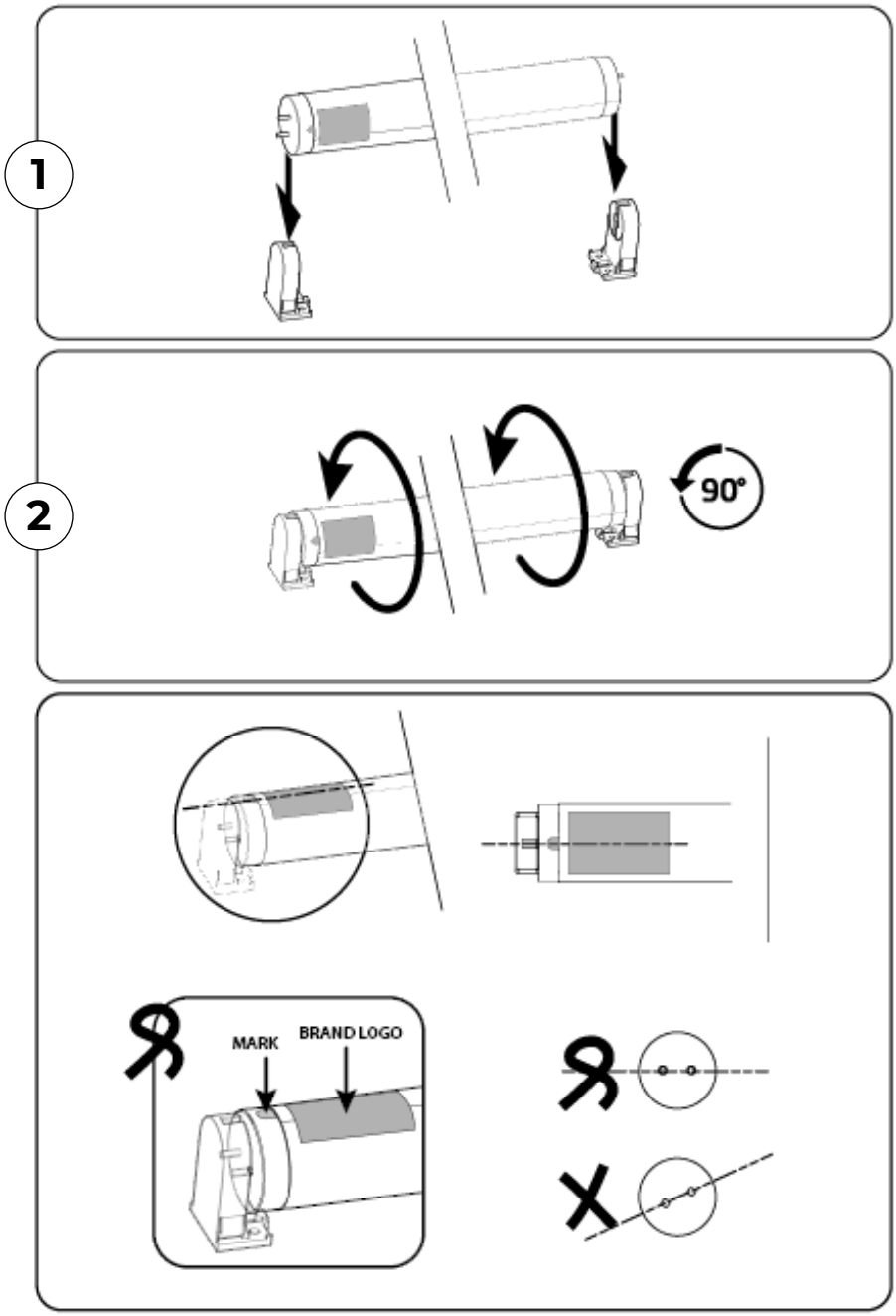

Replacing Facial Tanners

1

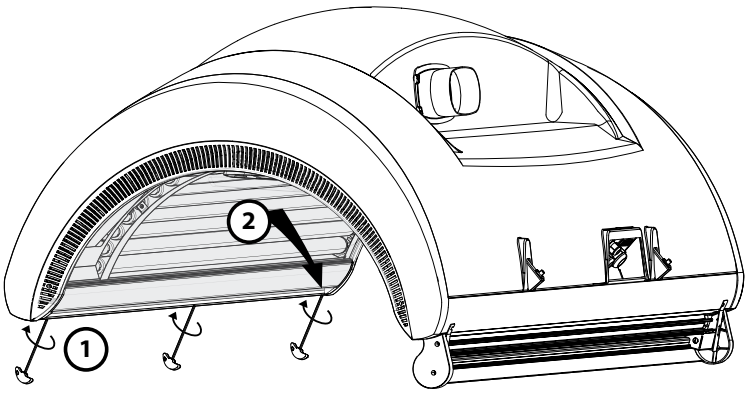

2

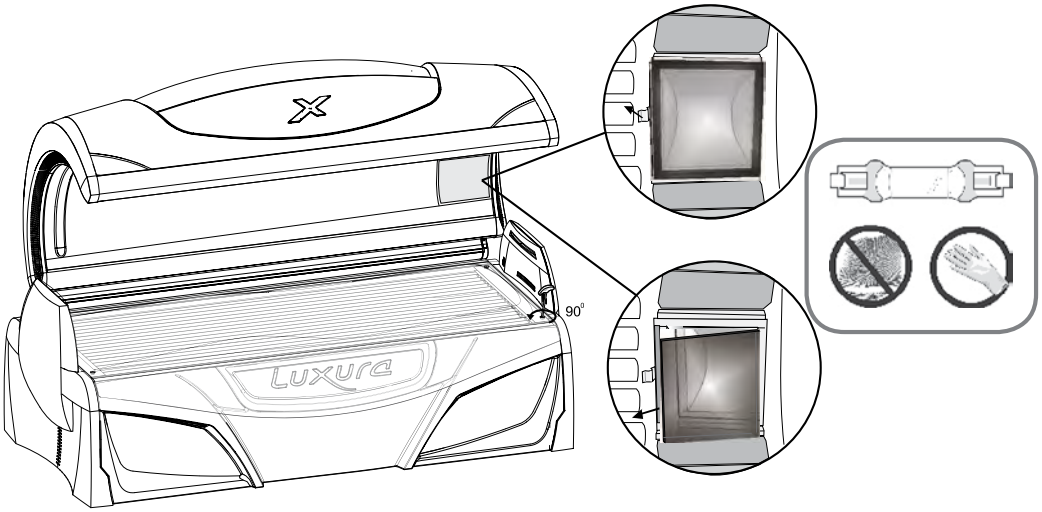

Changing SoundAround

You can replace your SmartVoice card with a different SmartVoice card.
You can place your own music on the Studio 1 and Studio 2 cards. Only use the supplied memory cards.

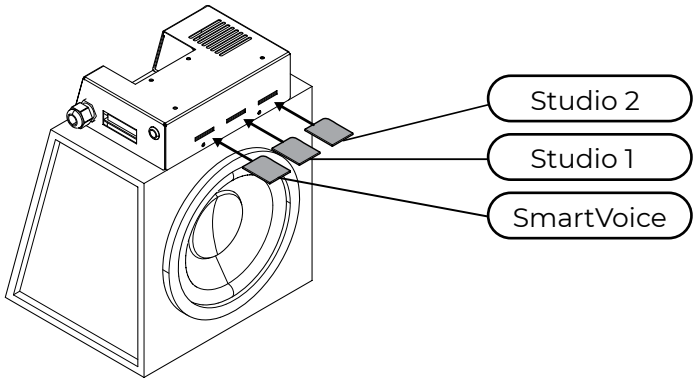

Removing and cleaning Filter Holders

2 x

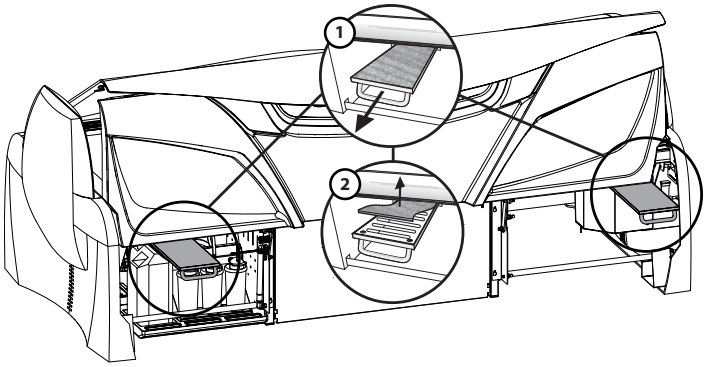

1 x

only High Intensive without airco

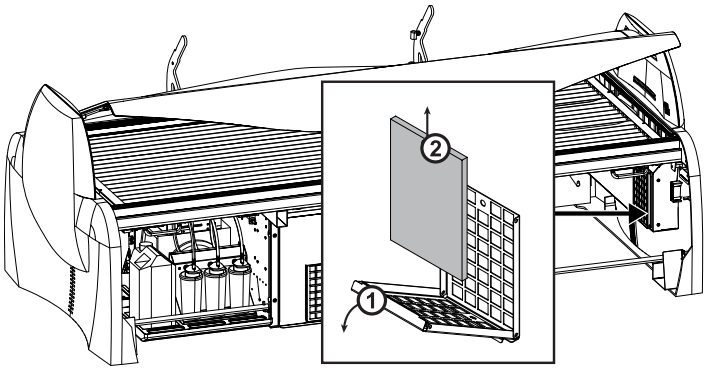

1 x

only without airco

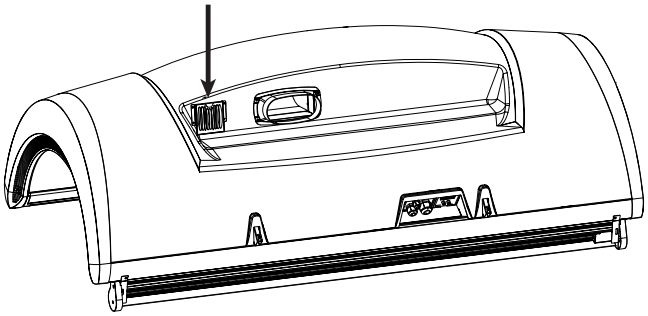

2 x

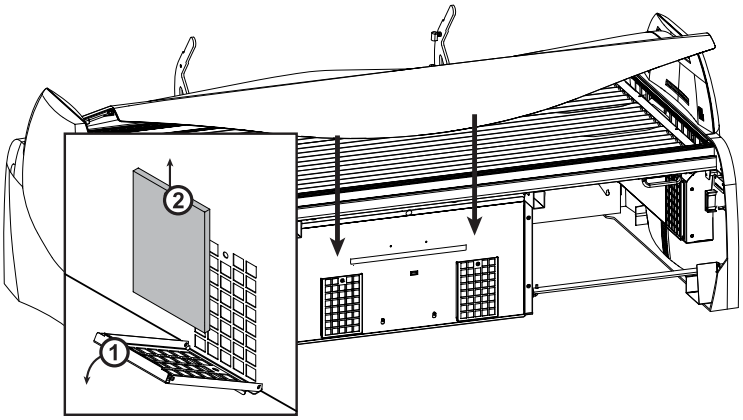

Emptying the A/C Container

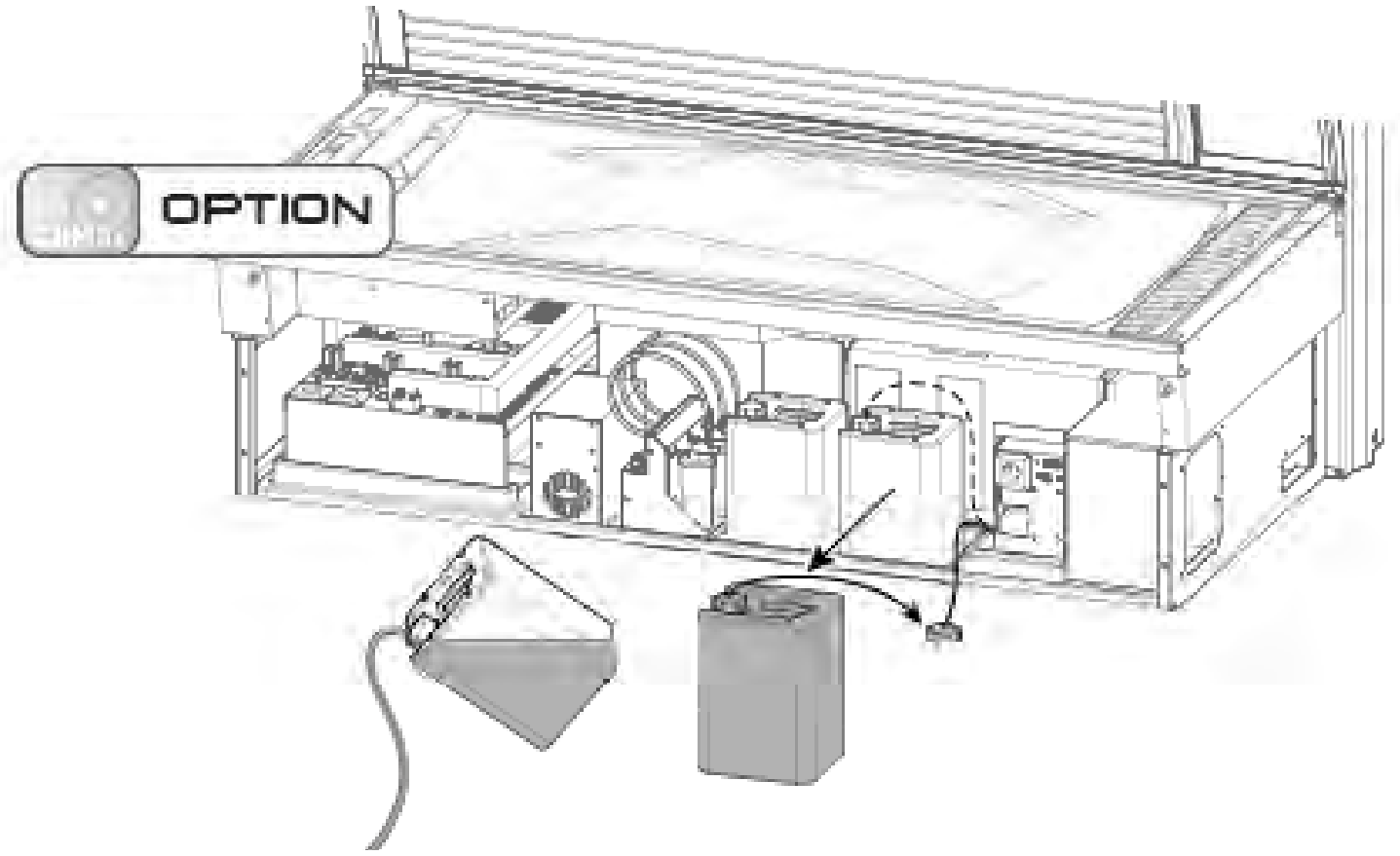

Not all option may be available for your equipment

Replacing Qsens Container

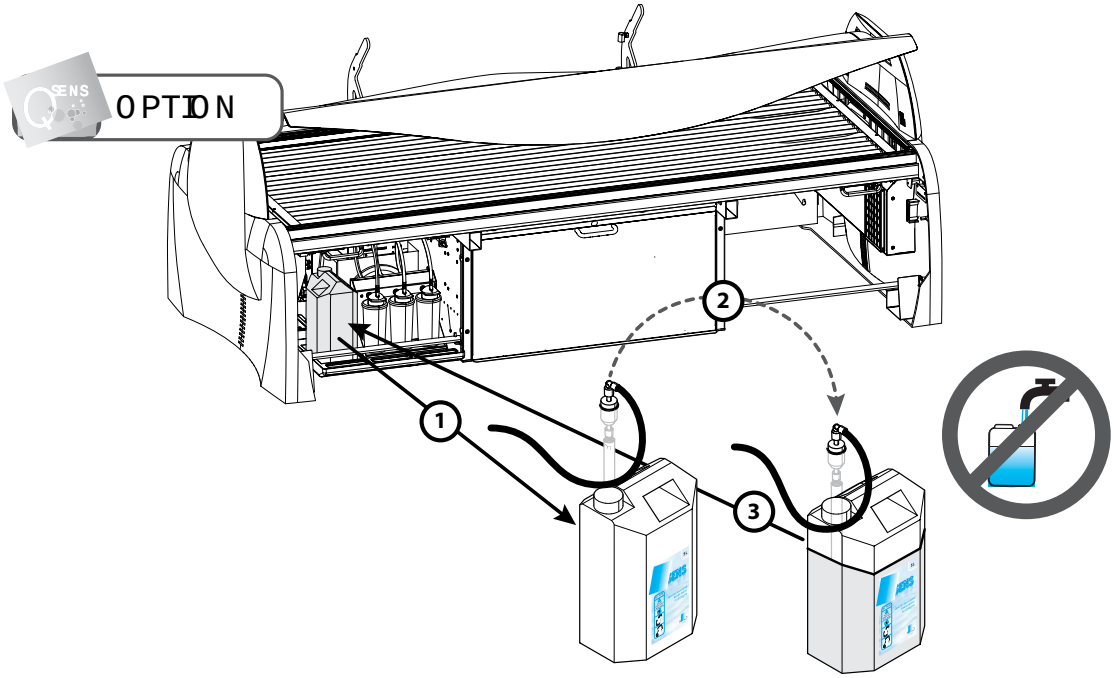

Replacing Xsens Cans

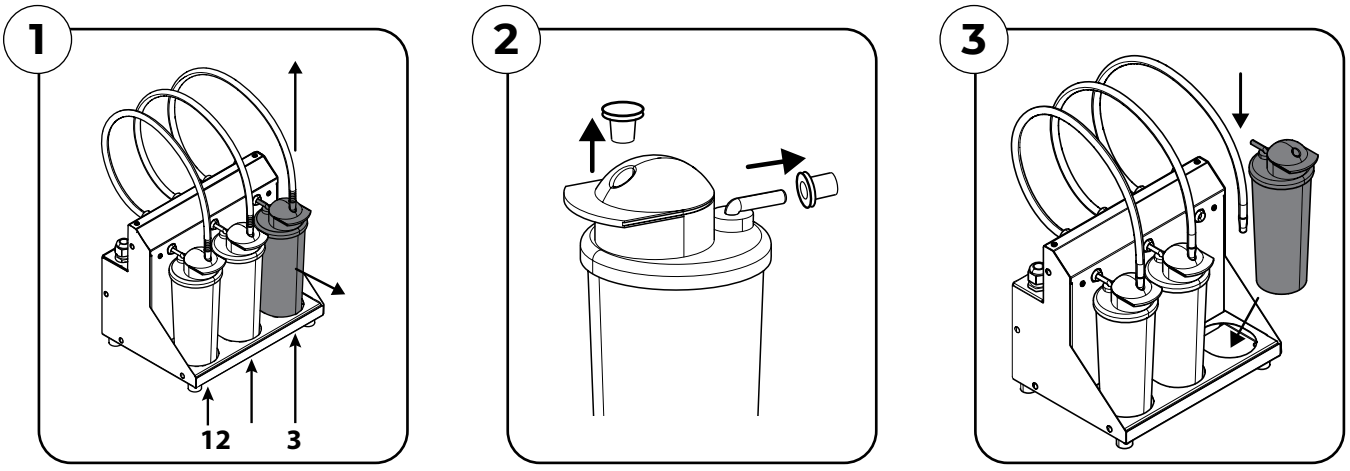

Replacing the Xsens (option) cartridges

If you purchased an Xsens III set, you can replace an empty can with a full one (A). There must always be 3 cartridges connected.

If you wish to install fewer than 3 cartridges (B), you must disconnect the supply hose to the can and install the optional plug (P). Always place full cartridges as far as possible to the left (position 1). In the parameter menu, set the number of full cartridges that are present by selecting '06 - Xsens' › '02 - Number of Xsens cartridges'. ›

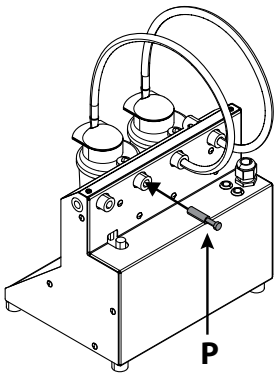

Assembly Introduction

Required for assembly (not included):

- Preferably 2 wrenches to tighten bolts and nuts
- Short ladder or step stool
- Power adapter kit (230V for commercial use, for warranty to apply voltage must be between 218-230 V)

*Make sure you write the Serial Number (located on the Control Panel) down on the previous page and store the manual somewhere you can easily access. The Serial Number is MANDATORY to order parts for your unit, as well as, any customer service calls.

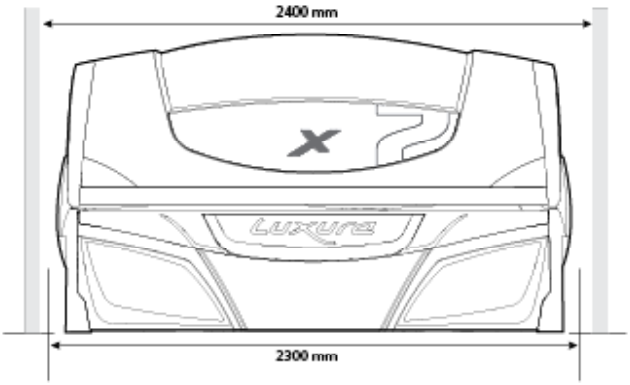

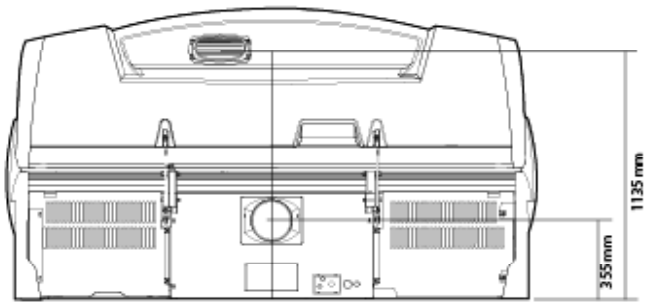

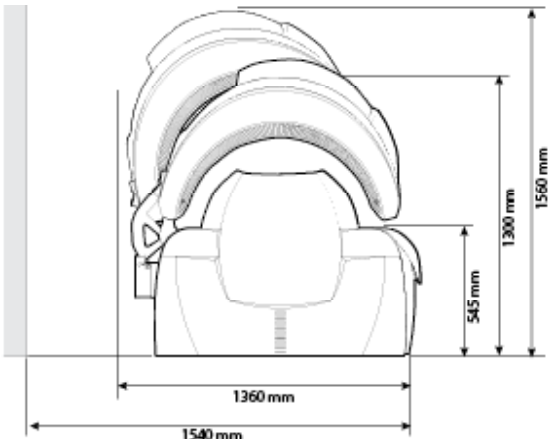

Included Parts

Make sure all parts are included before you begin.

		QTY
A20 *M8x20*		1
B11 *M6x20*		29
B31 *M8x20*		2
B38 *M8(10)x60*	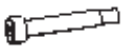	4
C04 *M6*		4
C05 *M8*		3
C07 *M6*		5
C08 *M8*		4
C19 *M6*		8
F12 *4,2x13*		2
F36 *3,5x19*		2
F37 *4x12*		12
F44 *4,2x9,5*		4
G01 *M6*		2
G03 *M6*		1
G16 *M8*		2

		QTY
G17 *M10*		2
J01		1
J74 *M8 10,3x15x18*		2
K03		1
K04		1
X02		1
X12	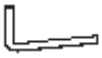	2
X13		1
X14 *M8*		2
X15		2
Z01 *4mm*		1
Z02 *5mm*		1

OPTION

B03 *M6x12*		10

Symbols

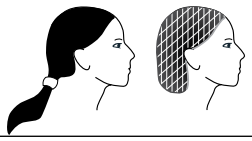	Warning symbol: People with long hair should wear a hairnet!
	Warning symbol: Wear the protective goggles provided
	Warning symbol: Attention please!
	Warning symbol: Sunbed should be disconnected from power source
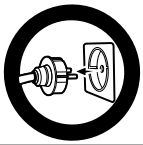	Warning symbol: Remove plug from socket
	Warning symbol: Not for household use
	Symbol: Facial tanner
	Symbol: Sunbed canopy
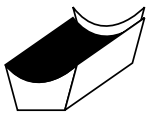	Symbol: Sunbed bed
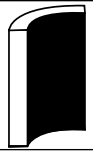	Symbol: Vertical sunbed
	Symbol: Only applicable if this option is ordered

Assembly

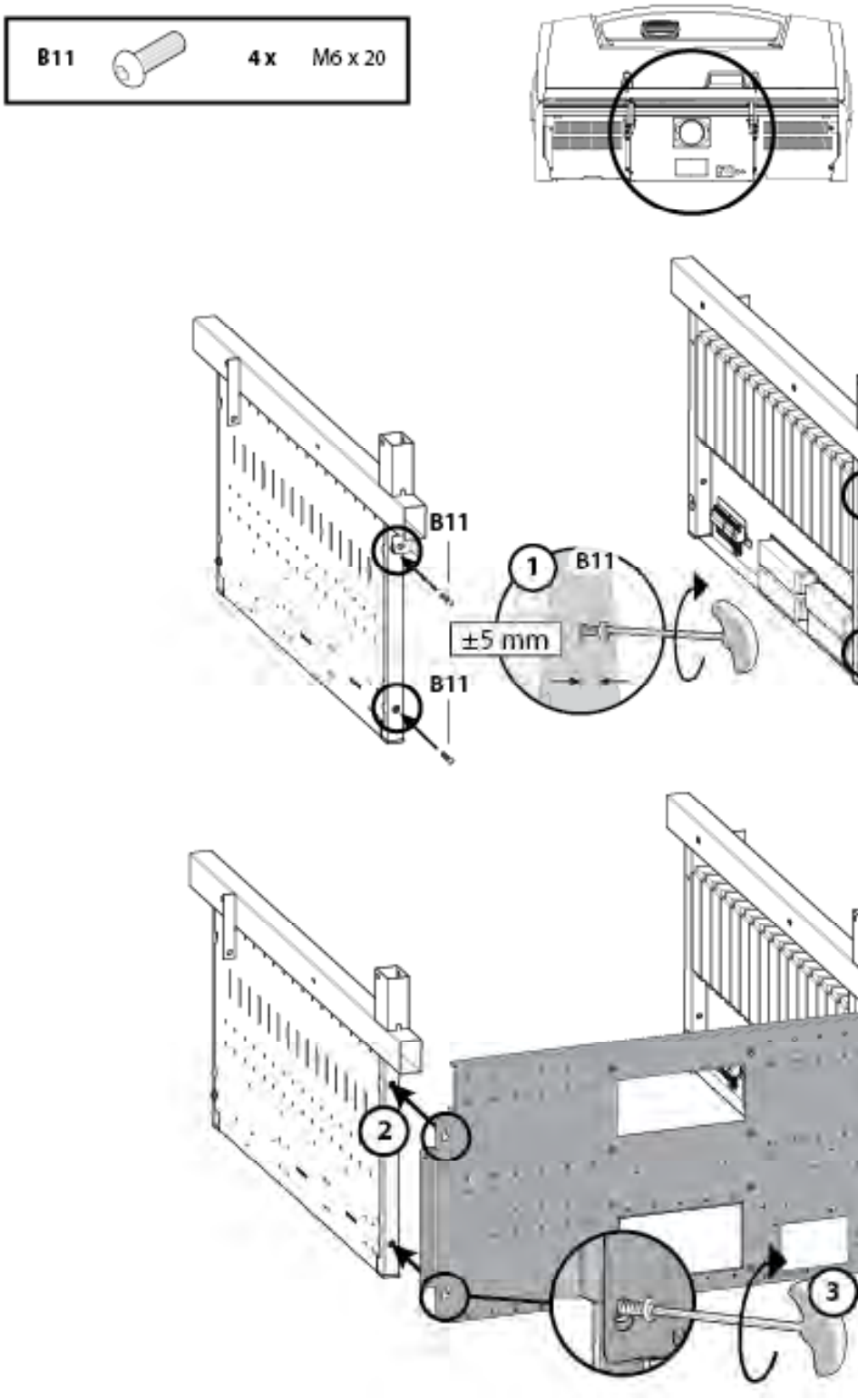

2

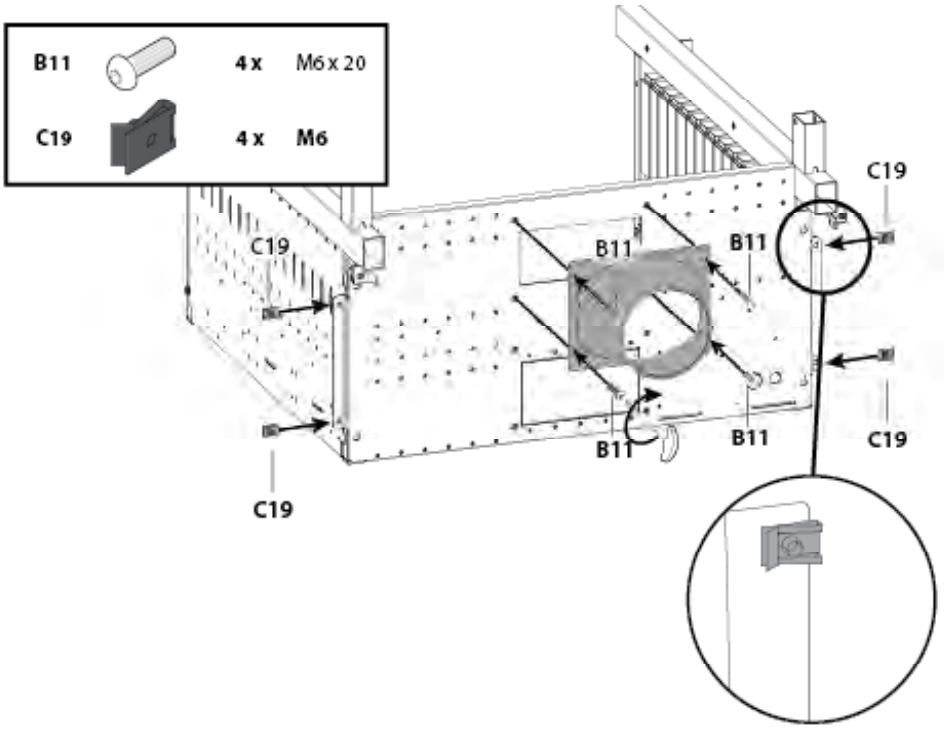
B11
4 x
M6 x 20
C19
4 x
M6
C19
B11
B11
C19
B11
B11
C19
C19

3

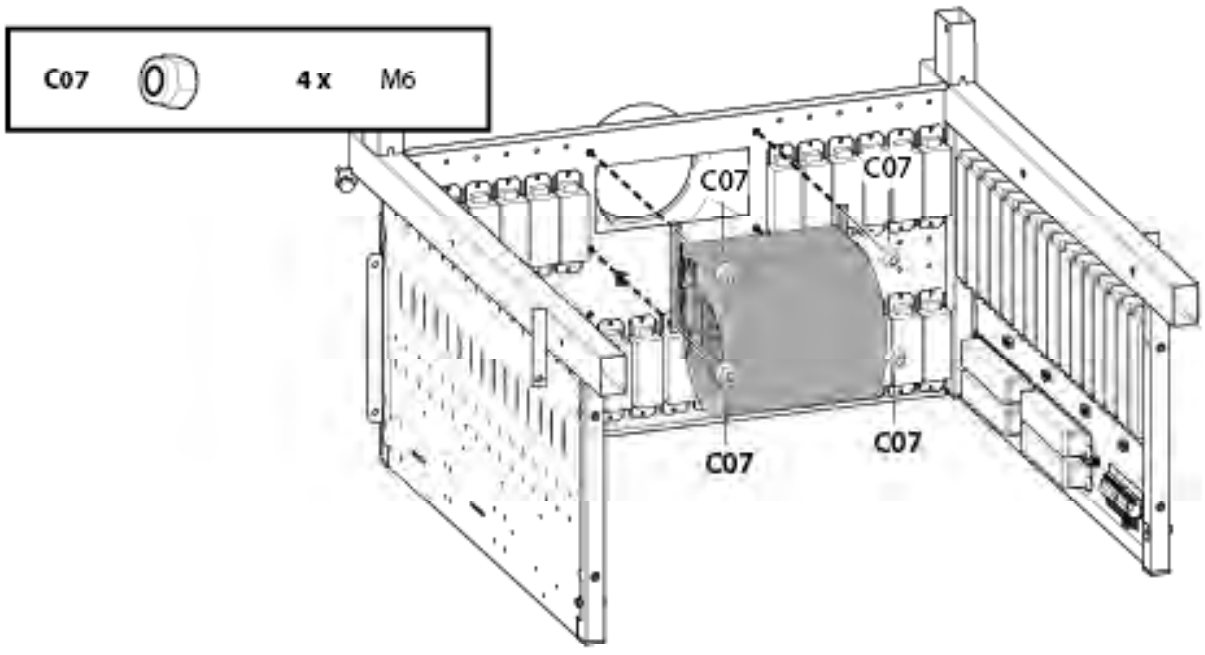
C07
4 x
M6
C07
C07
C07
C07

4

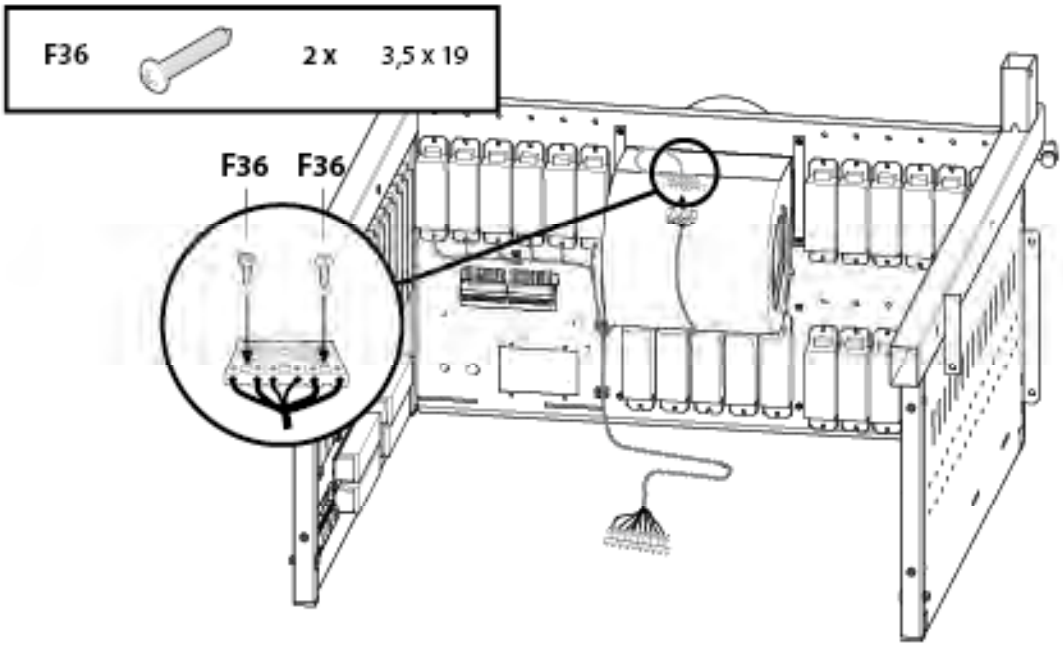

5

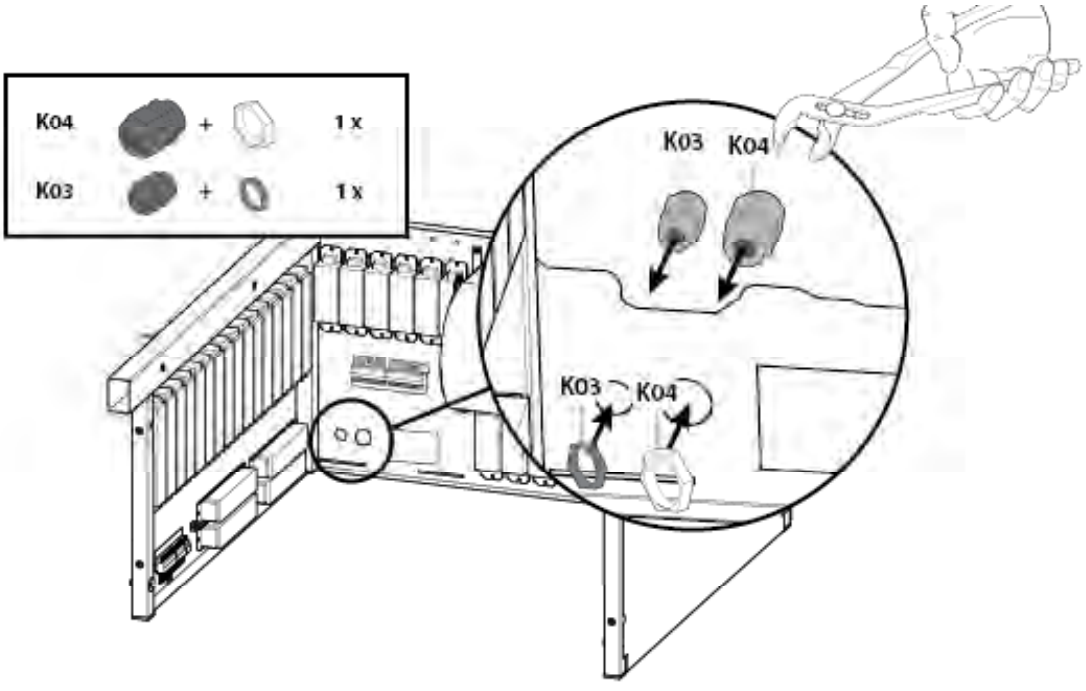

6

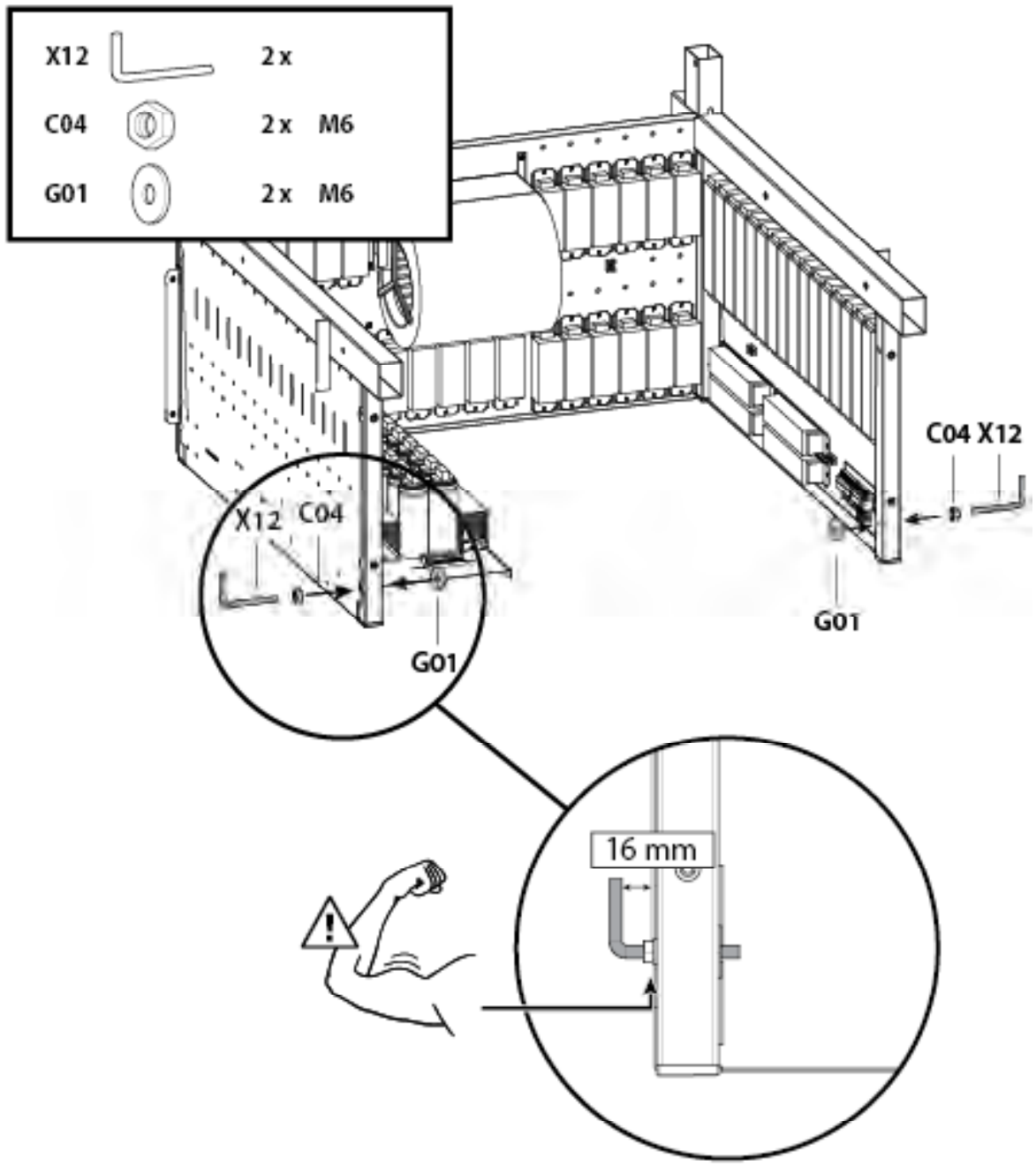

B38		4 x	M8 x 60
G17		2 x	M10
C08		4 x	M8
J74		2 x	M8 10x13x20
A20		2 x	M8 x 20
C05		1 x	M8

7

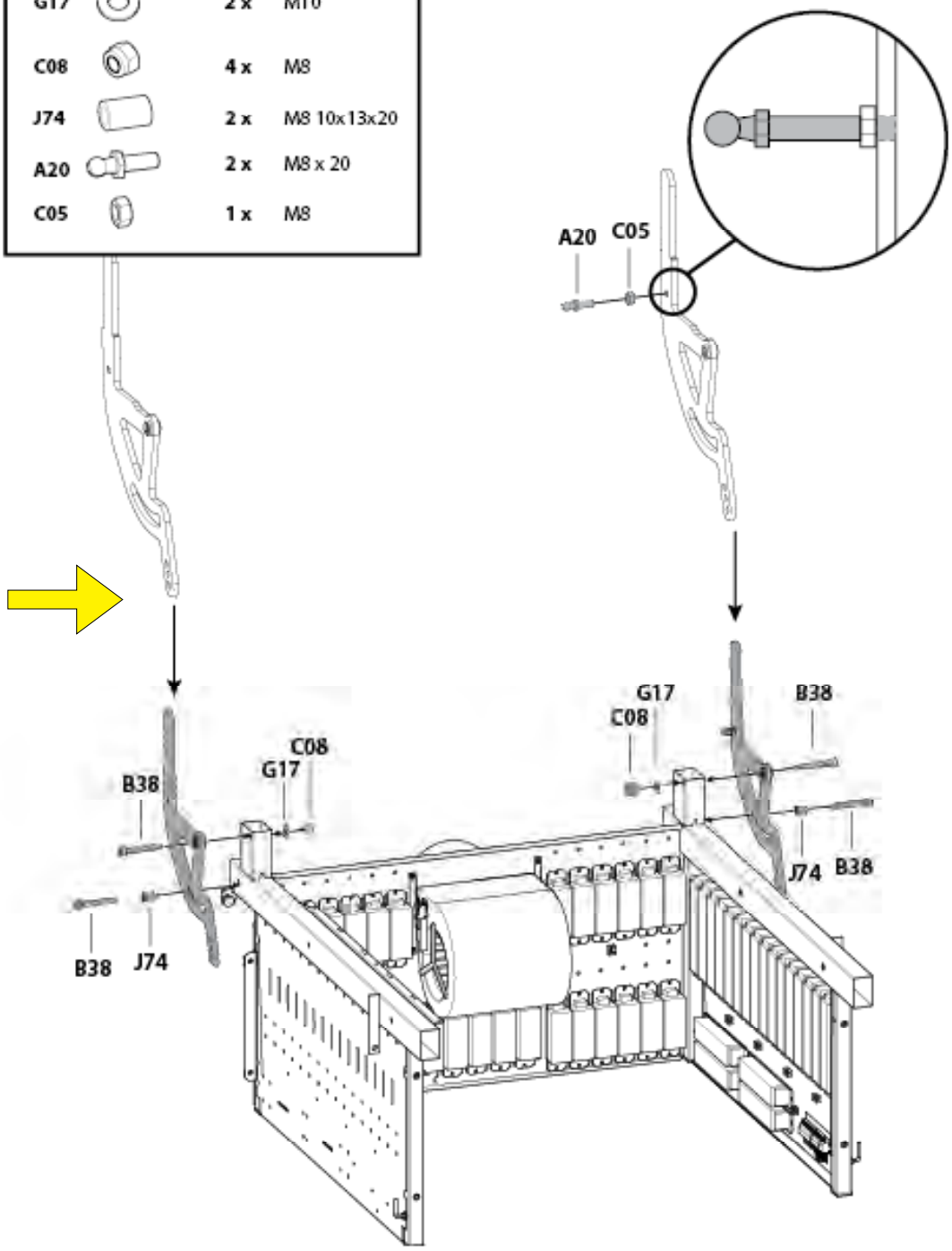

8

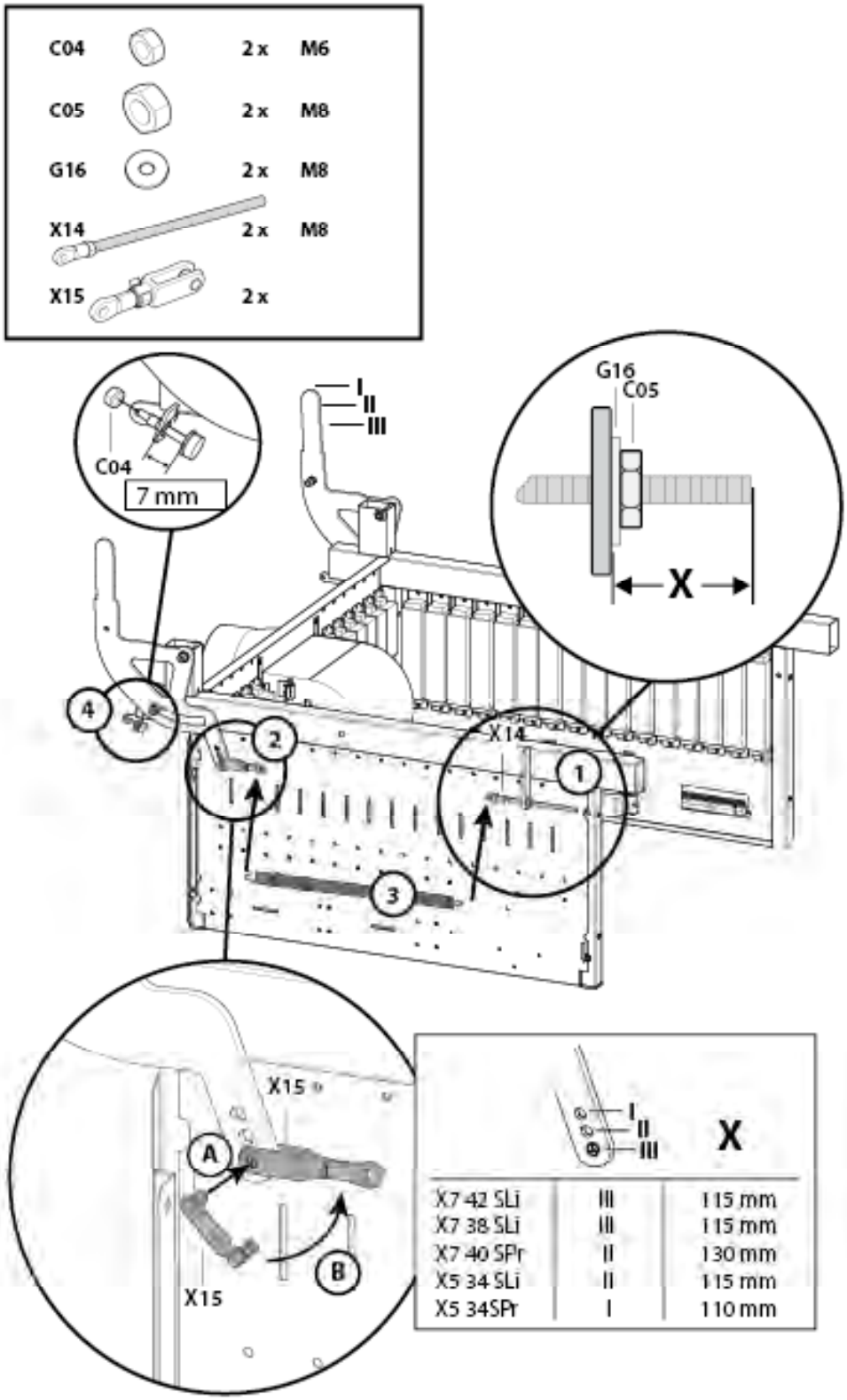

		X
X7 42 SLi	III	115 mm
X7 38 SLi	III	115 mm
X7 40 SPr	II	130 mm
X5 34 SLi	II	115 mm
X5 34SPr	I	110 mm

B11		1 x	M6 x 20
G03		1 x	M6
C07		1 x	M6
X02		1 x	

9

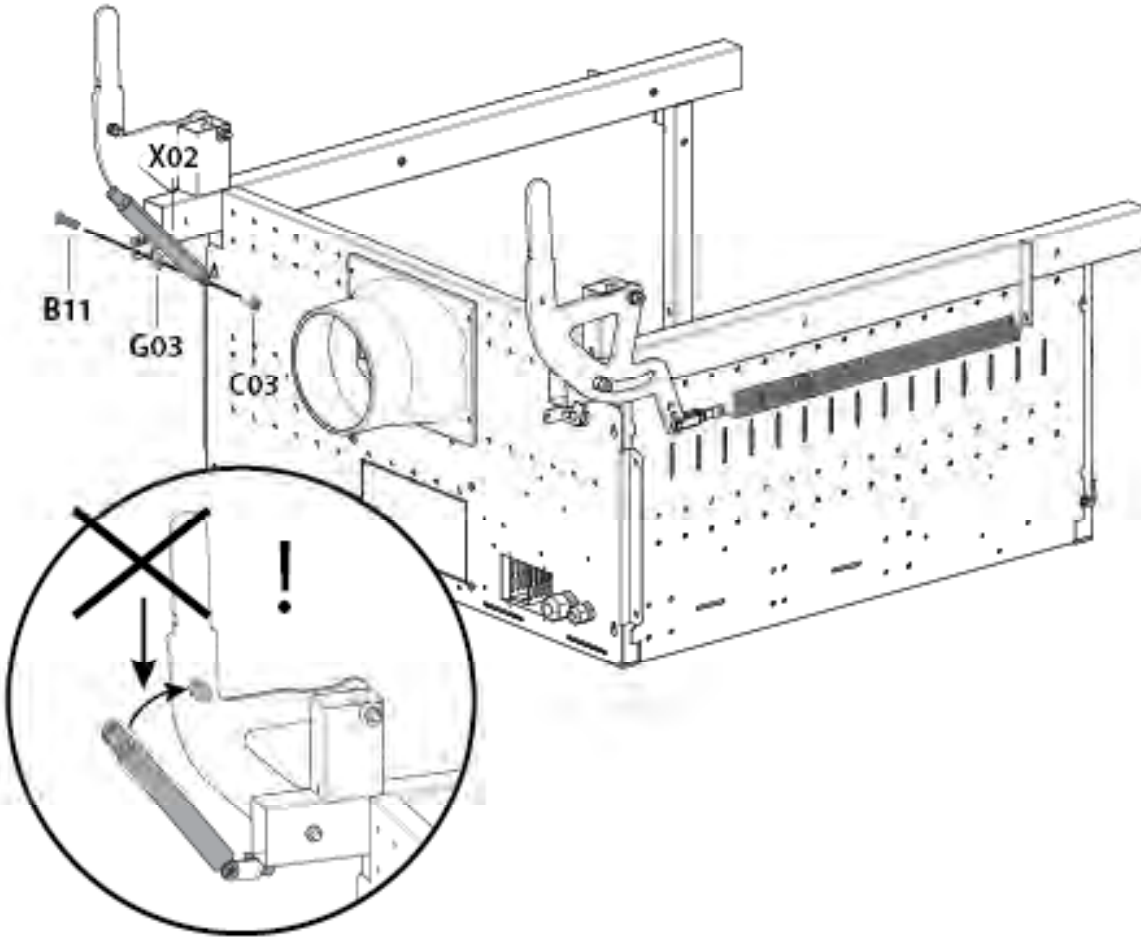

10

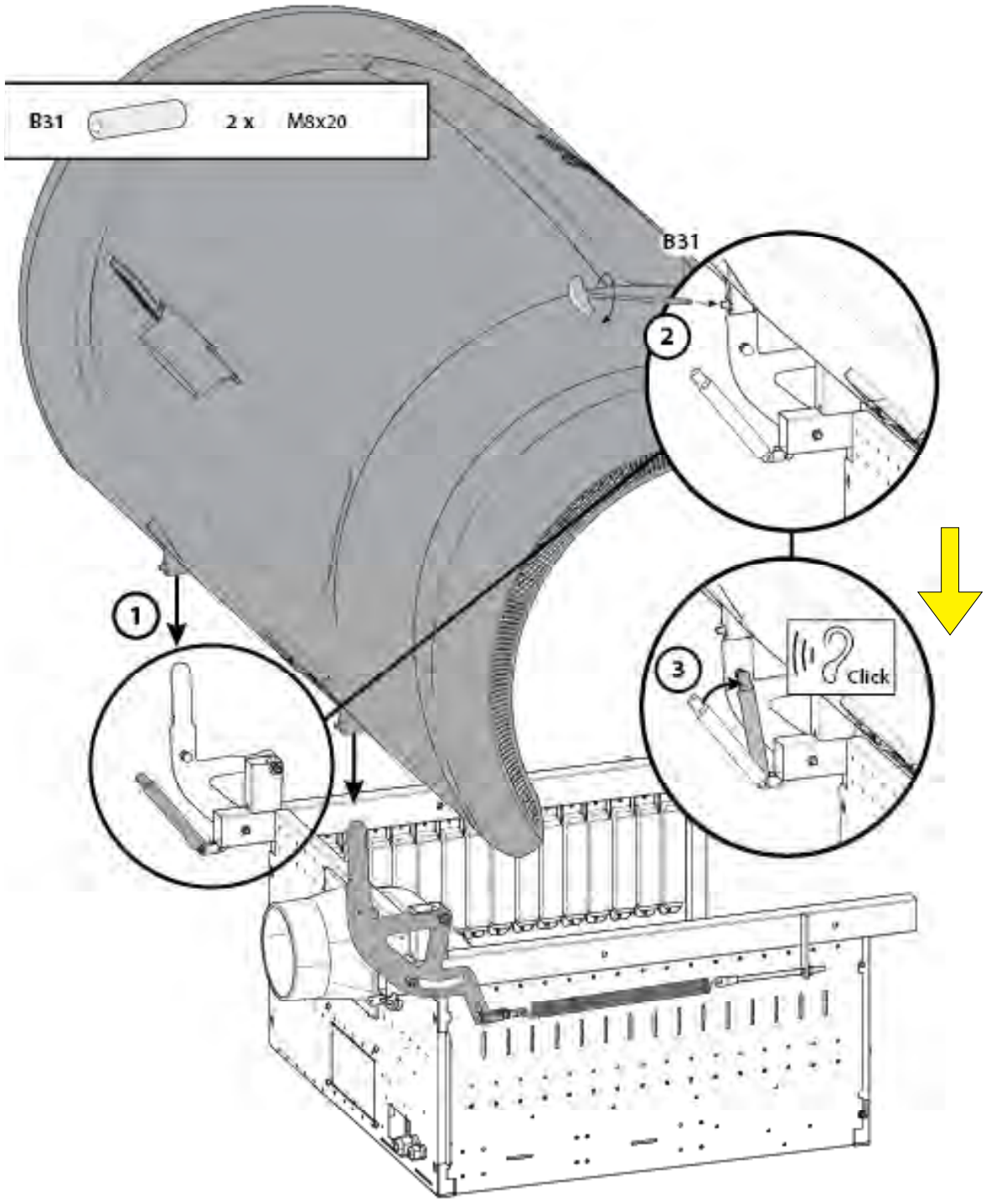

B11		4 x	M6 x 20

11

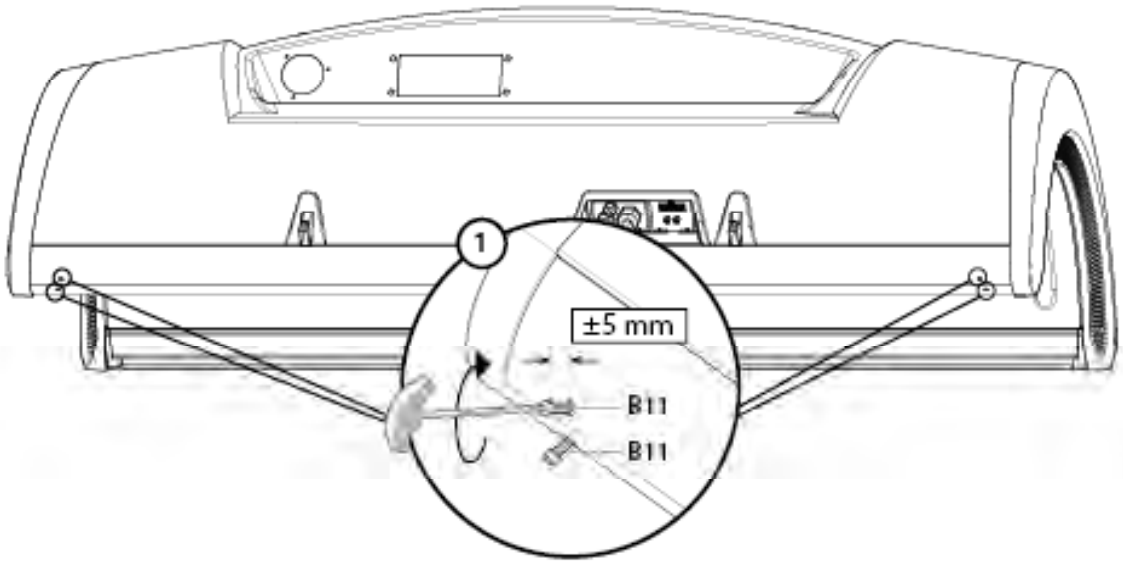

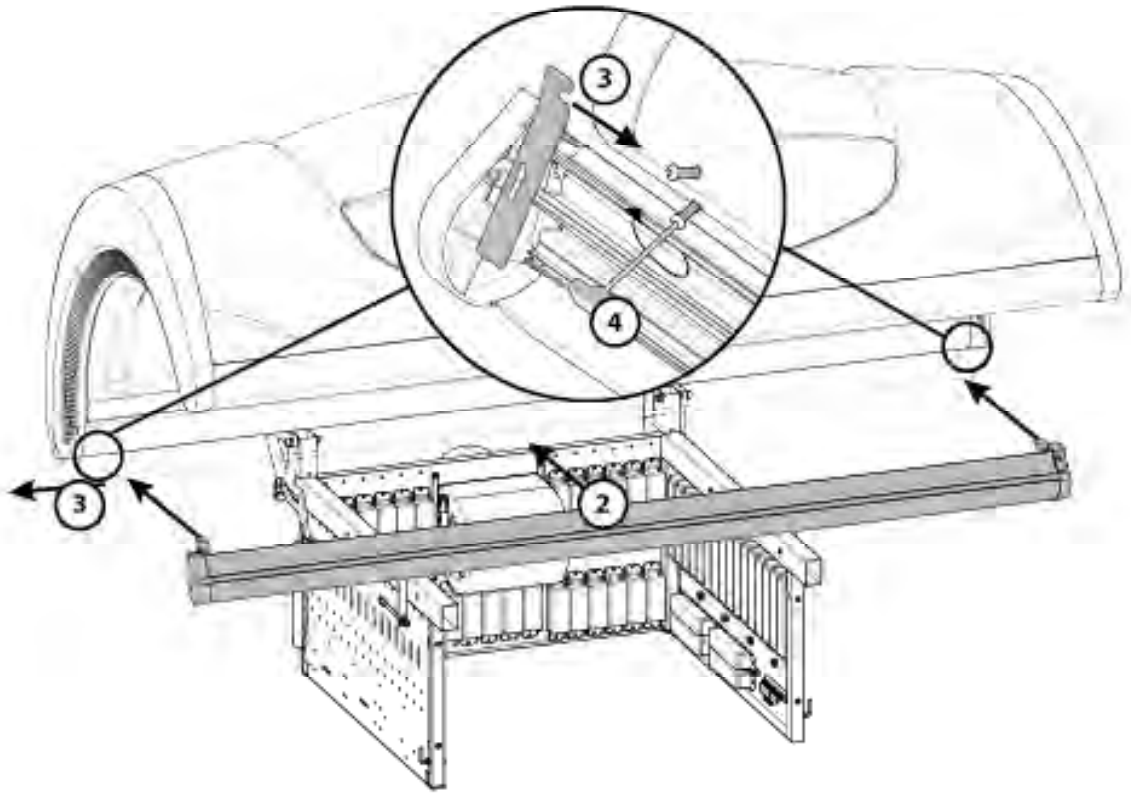

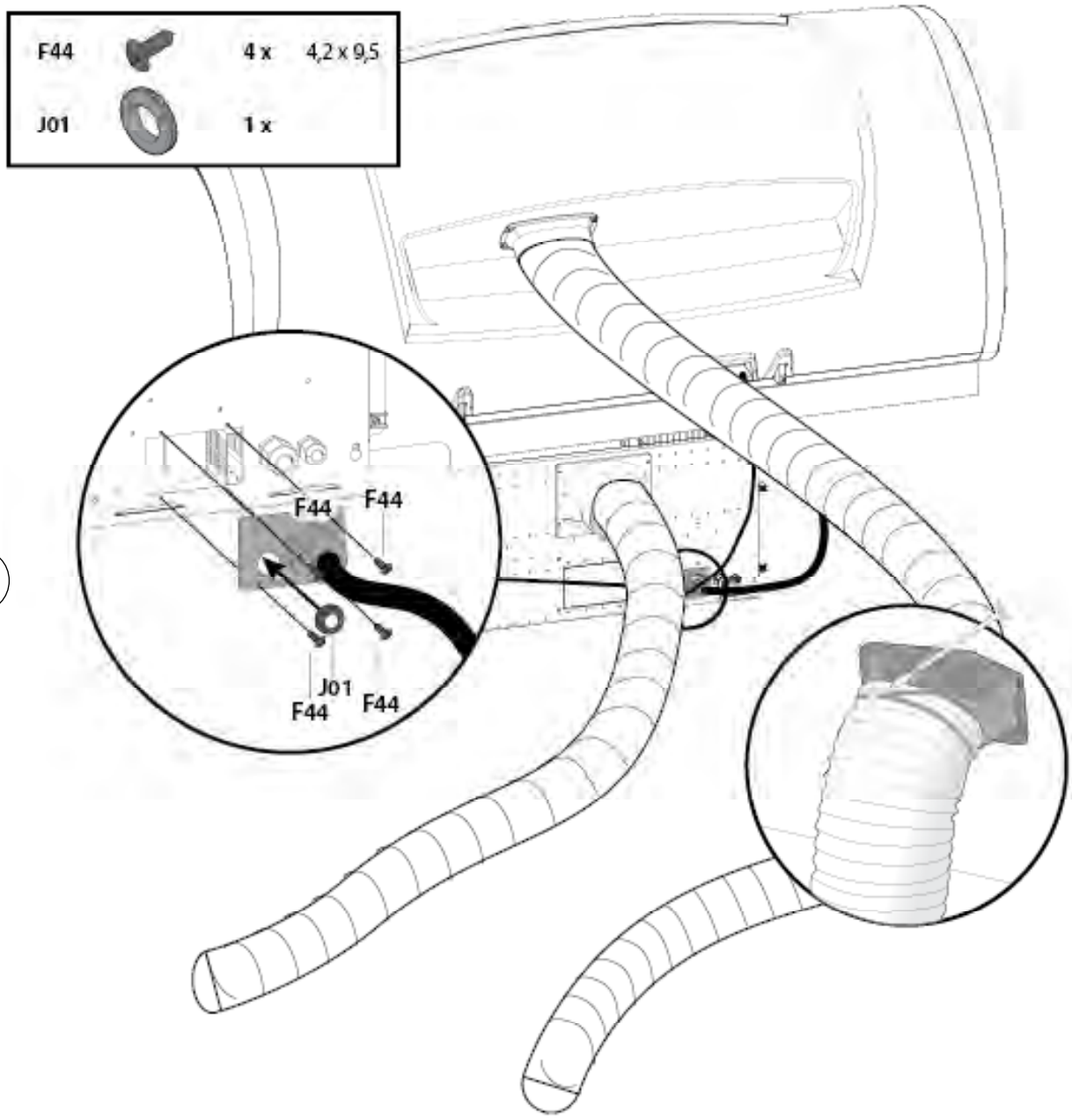

12

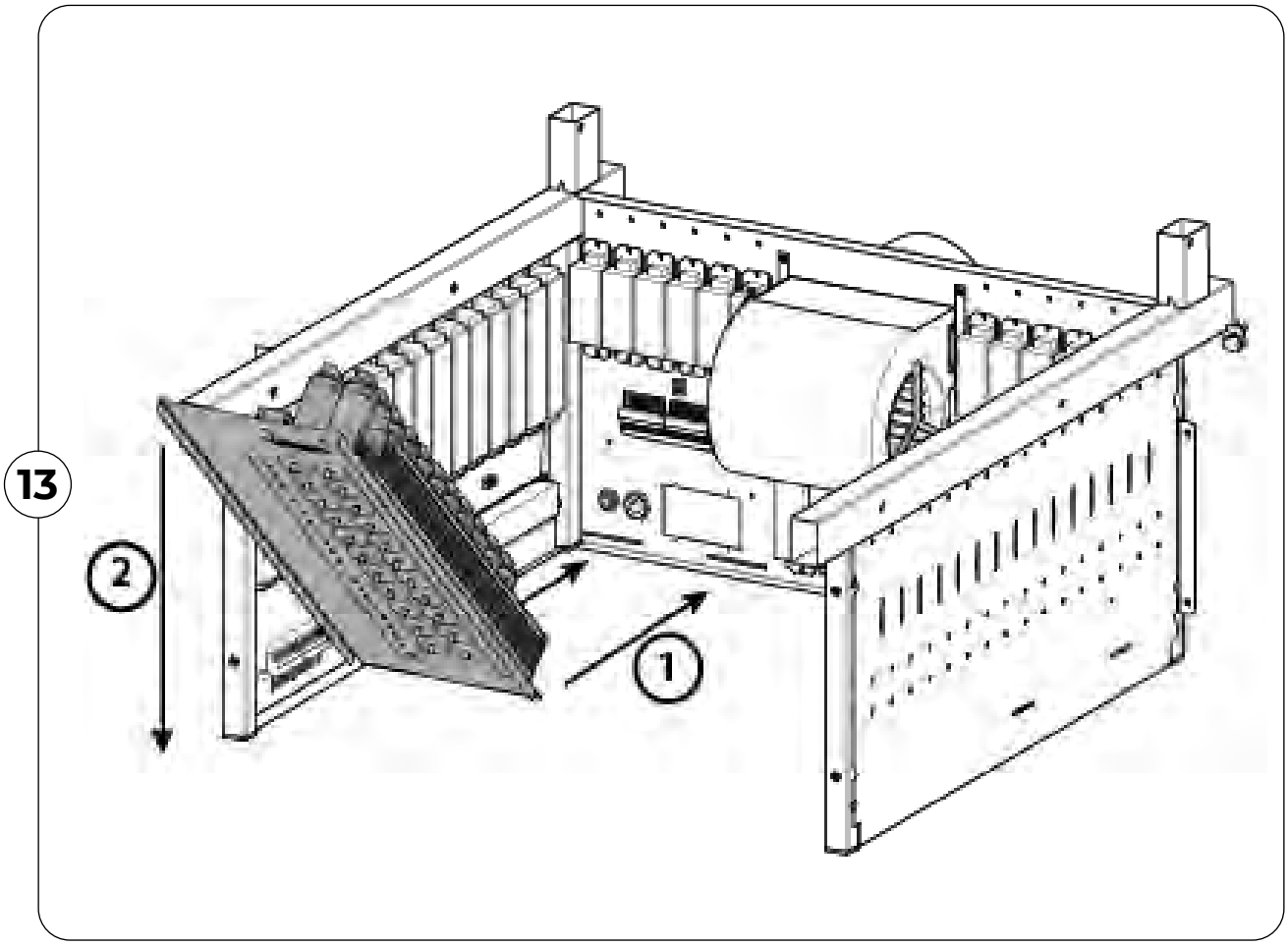
13
2
1

14

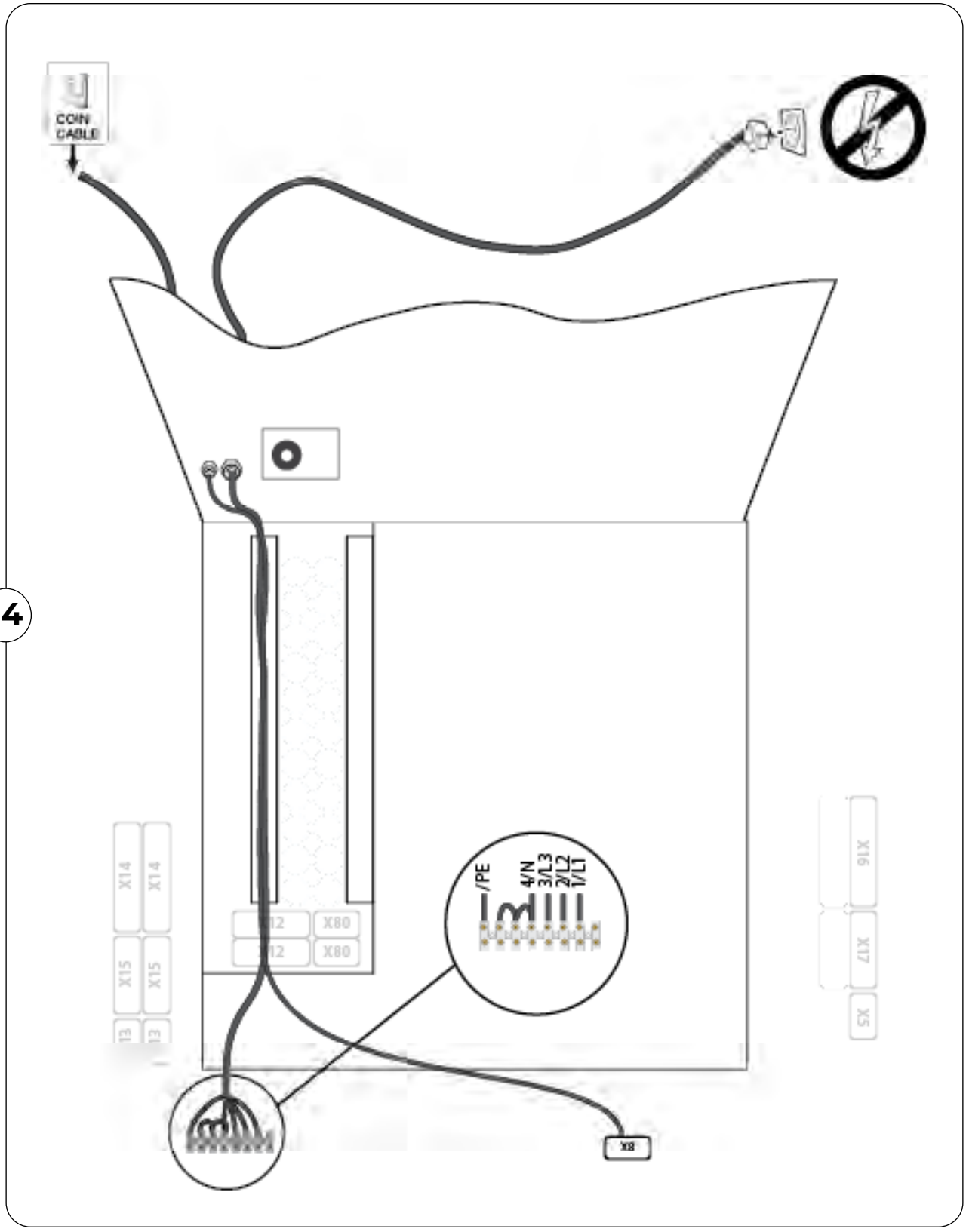
COIN CABLE
X14
X14
X15
X15
X12
X80
X12
X80
/PE
4/N
3/L3
2/L2
1/L1
X16
X17
X8

15

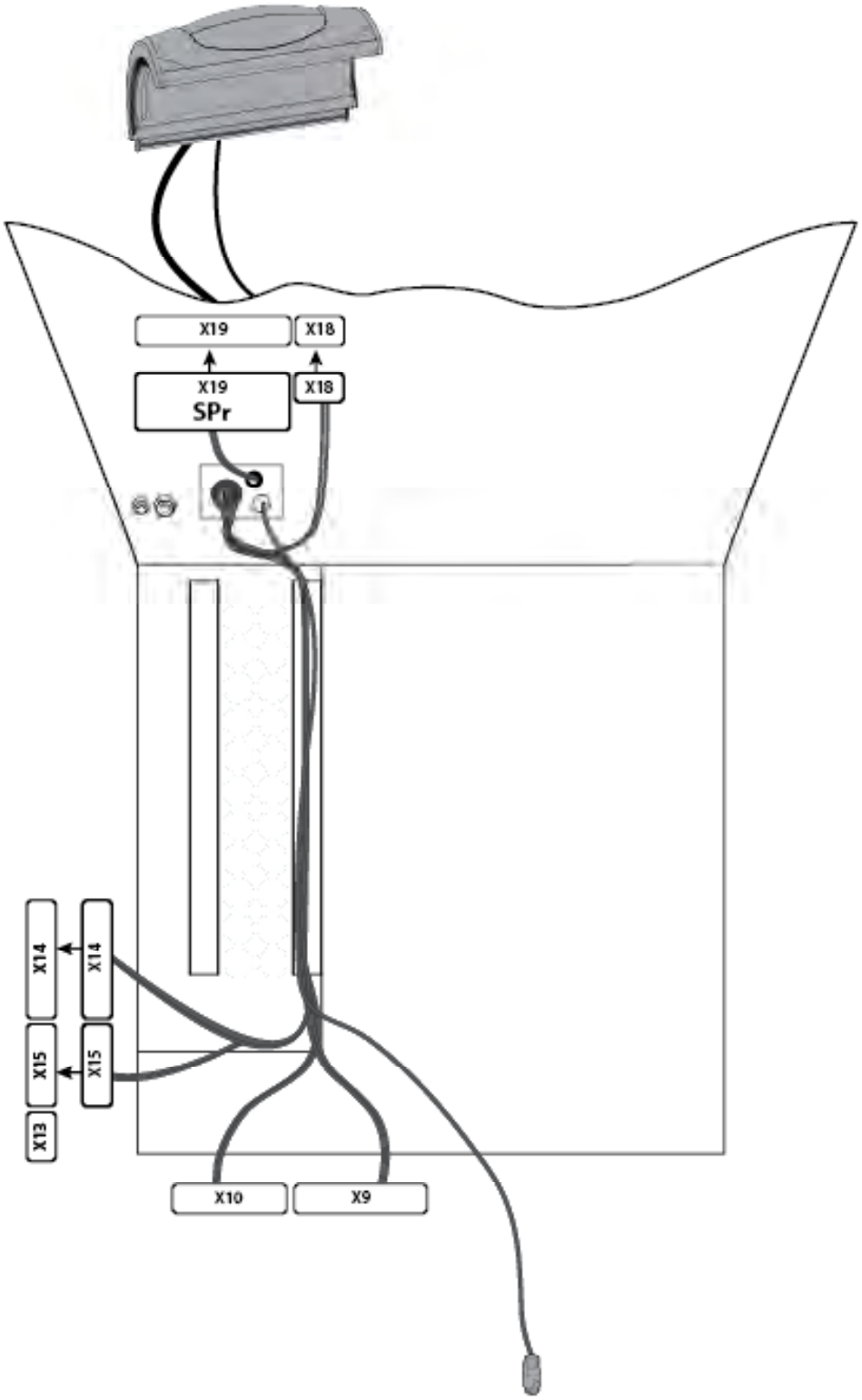

16

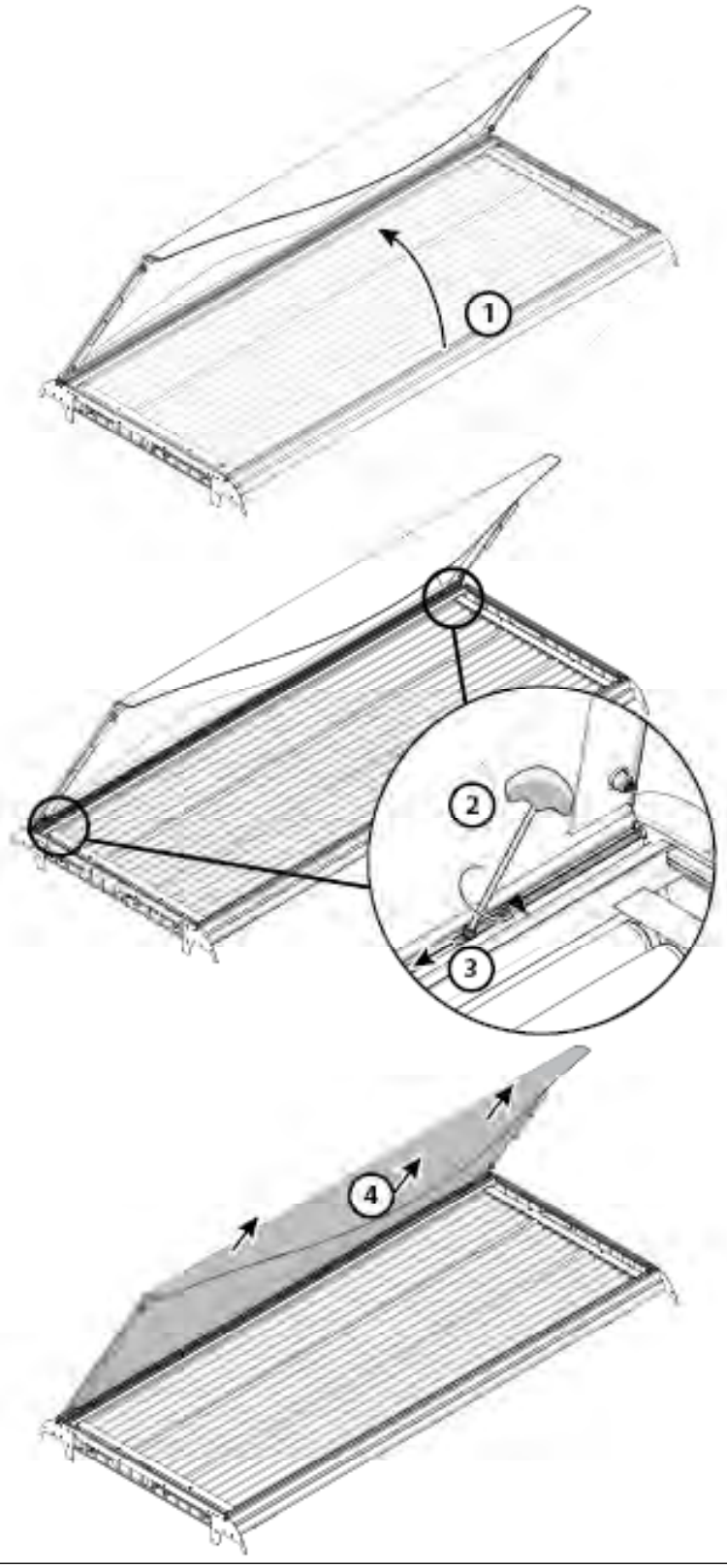

17

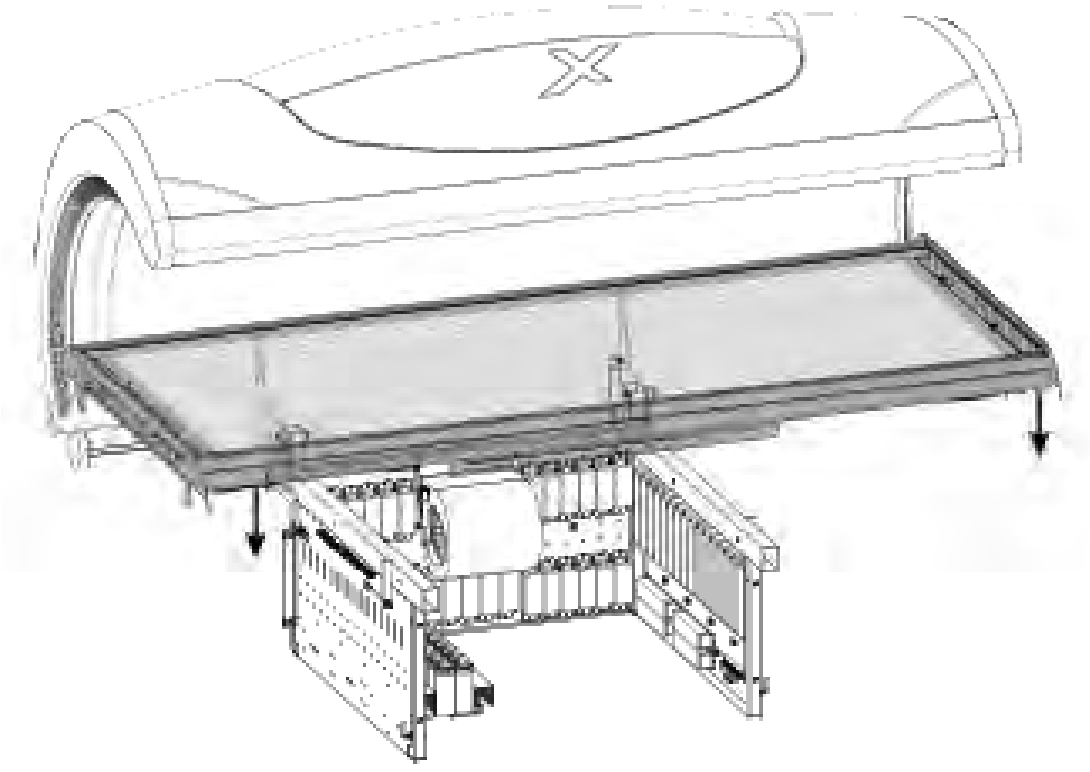

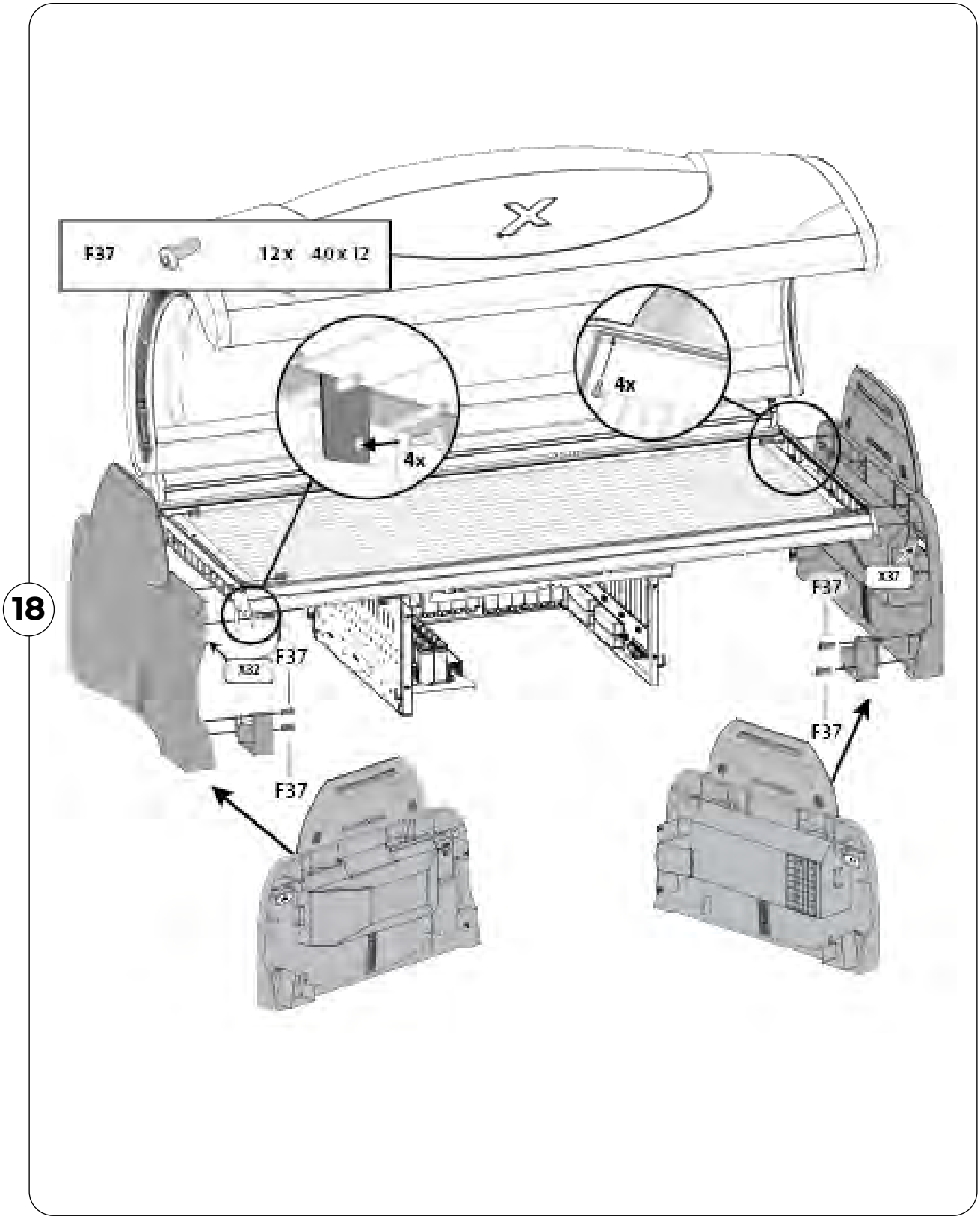

18

B11		4 x	M6 x 20

19

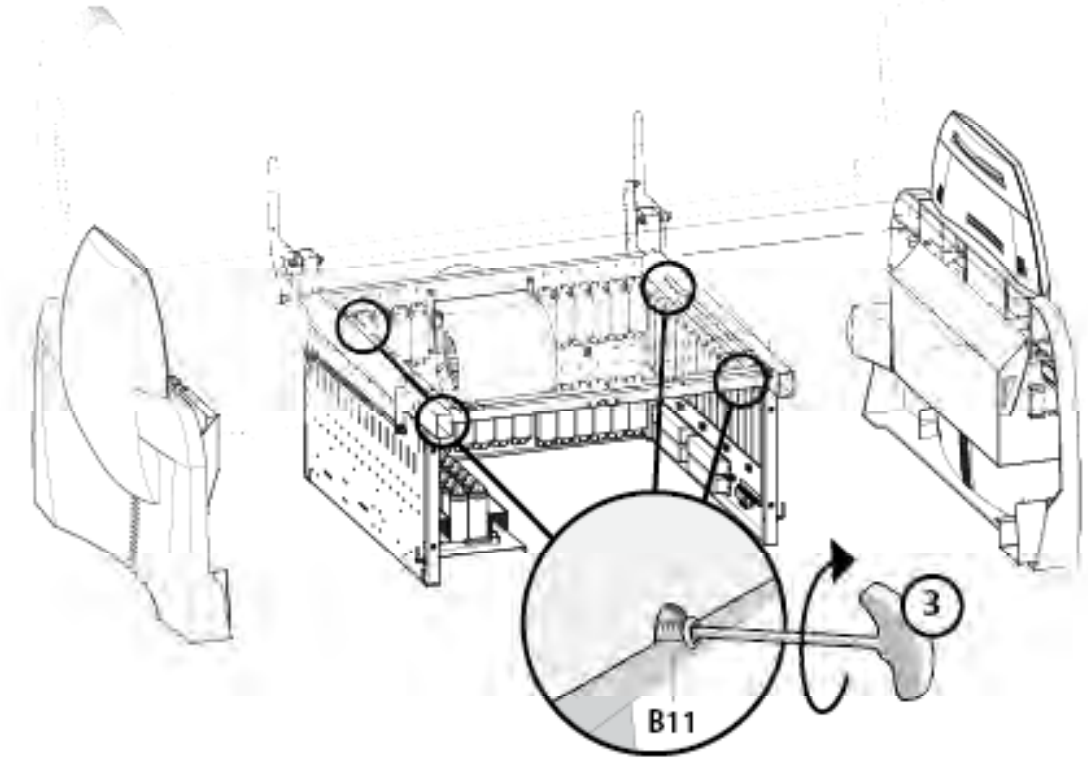

20

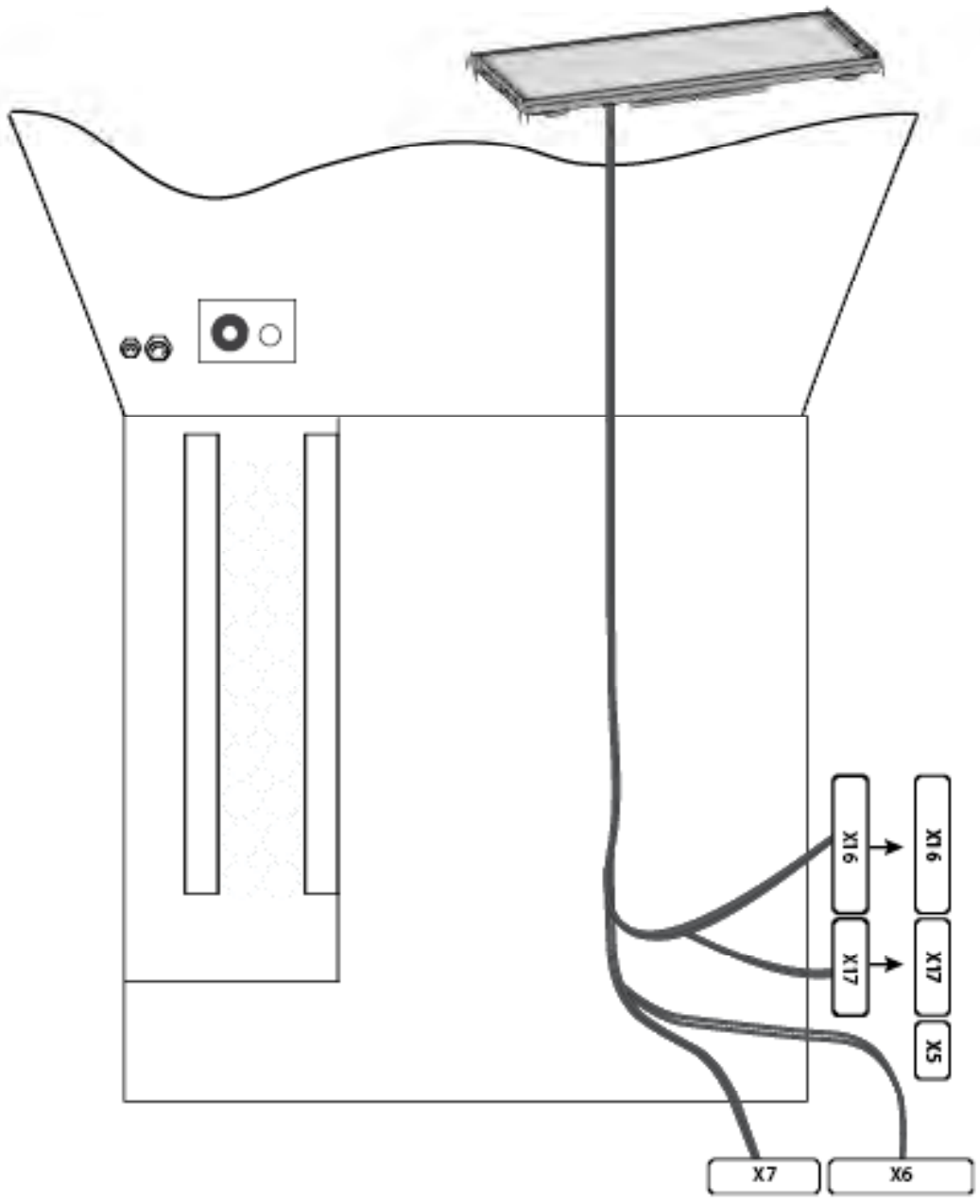

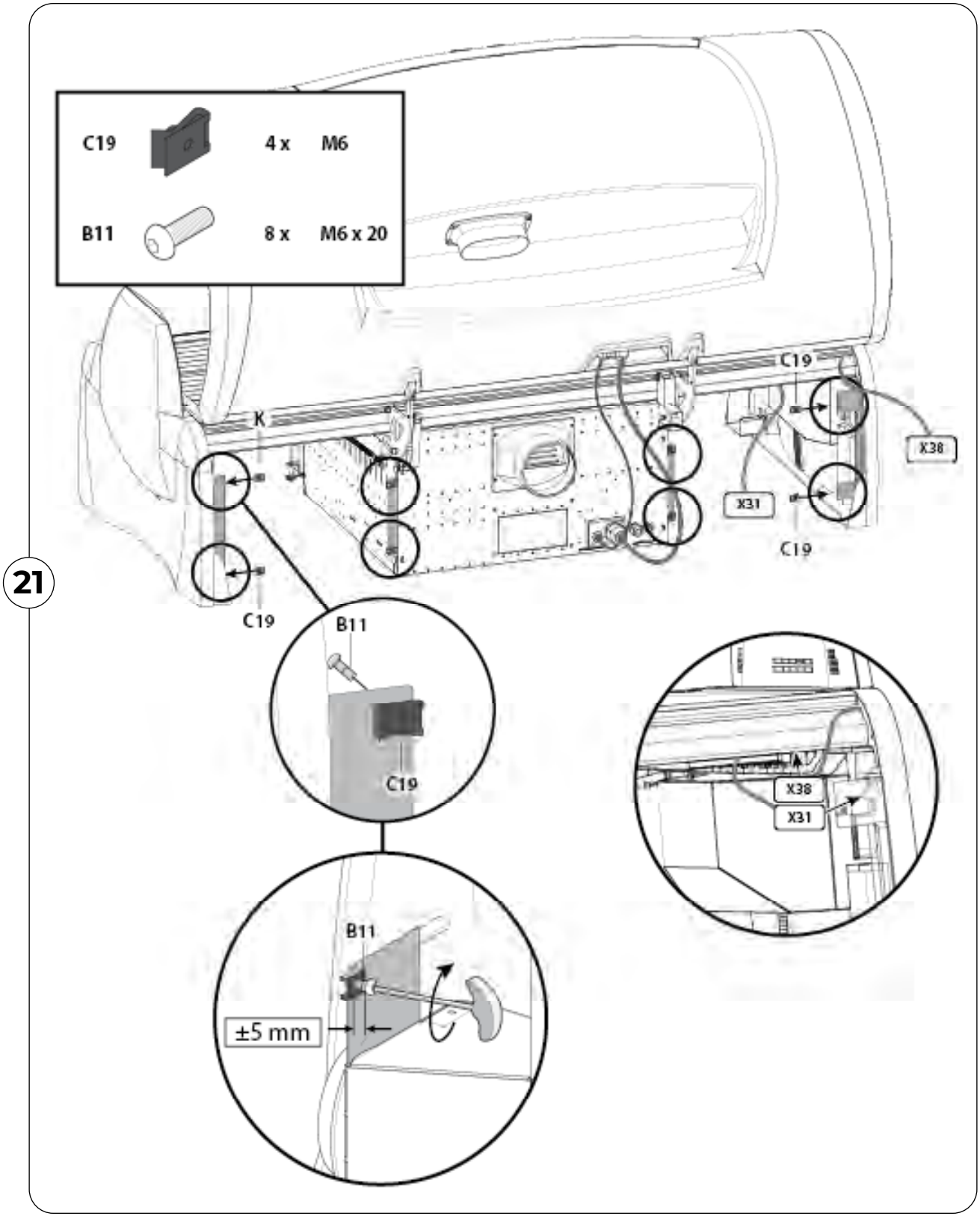
C19
4 x
M6
B11
8 x
M6 x 20
21
K
C19
X38
X31
C19
C19
B11
C19
X38
X31
B11
±5 mm

22

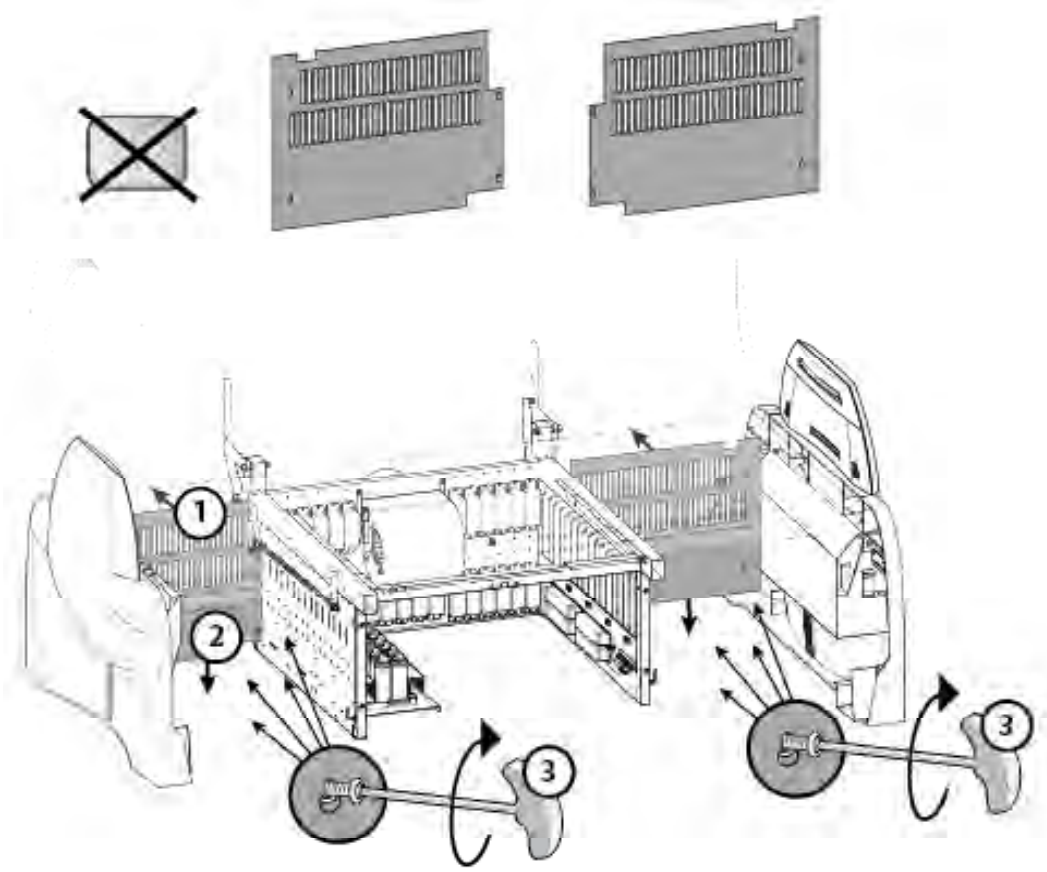

23

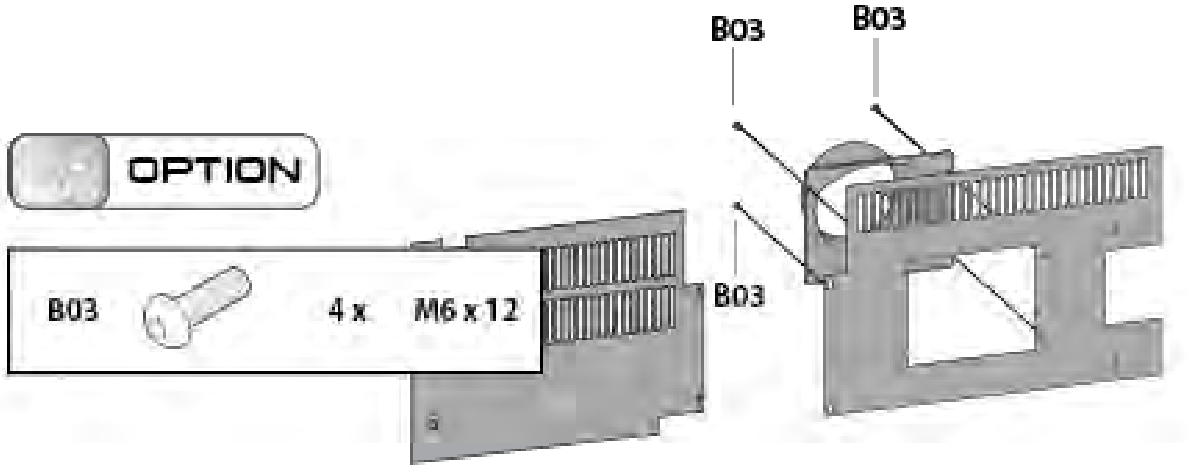

24

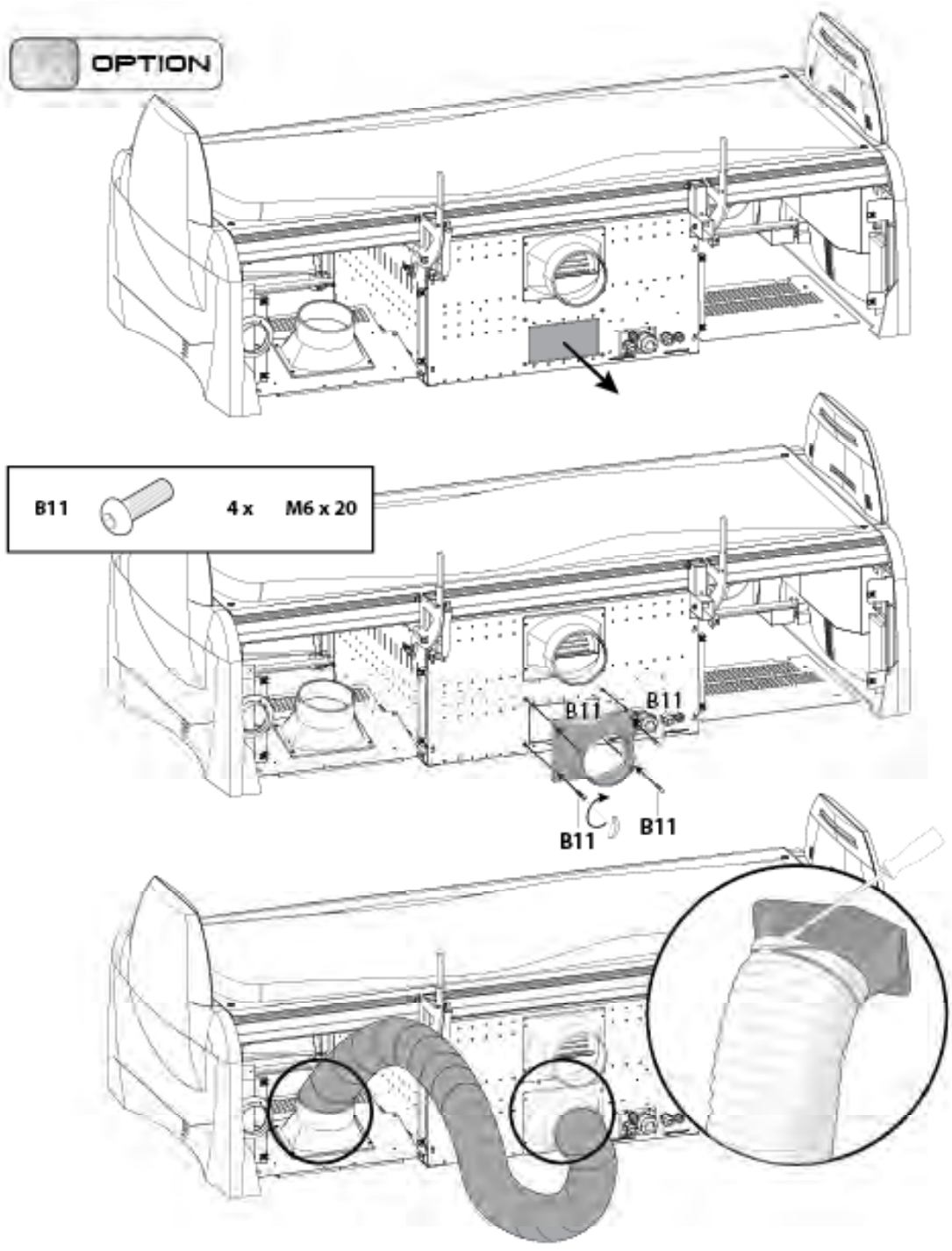

25

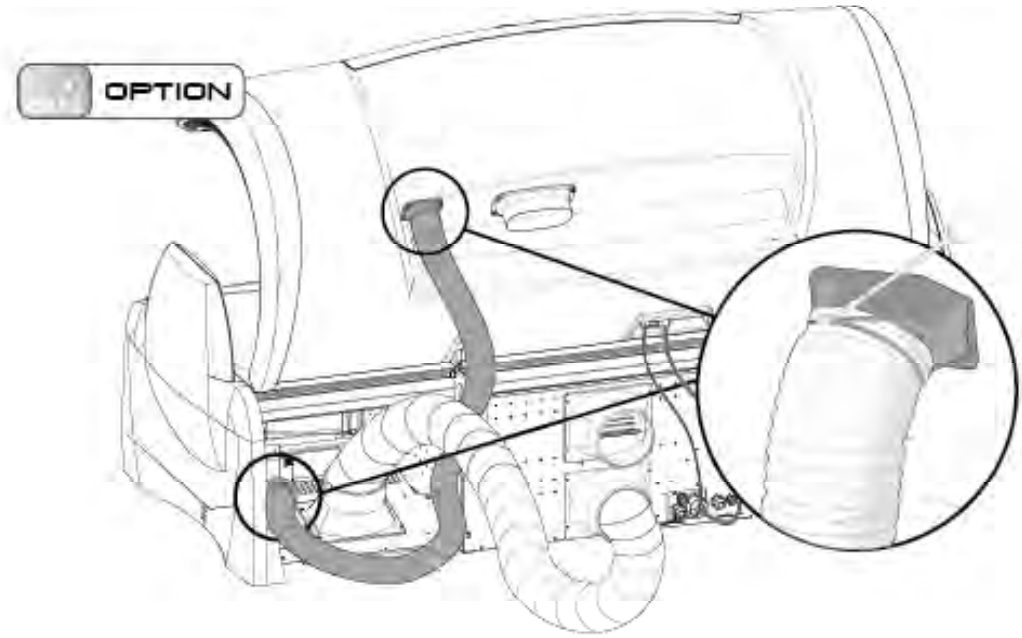

26

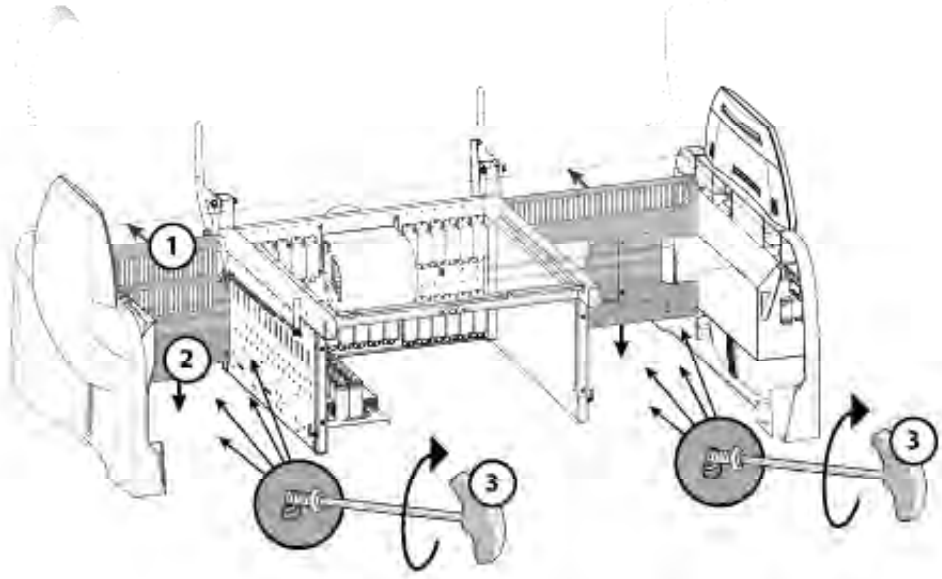

F12		2 x	4,2 x 13
X13		1 x	

27

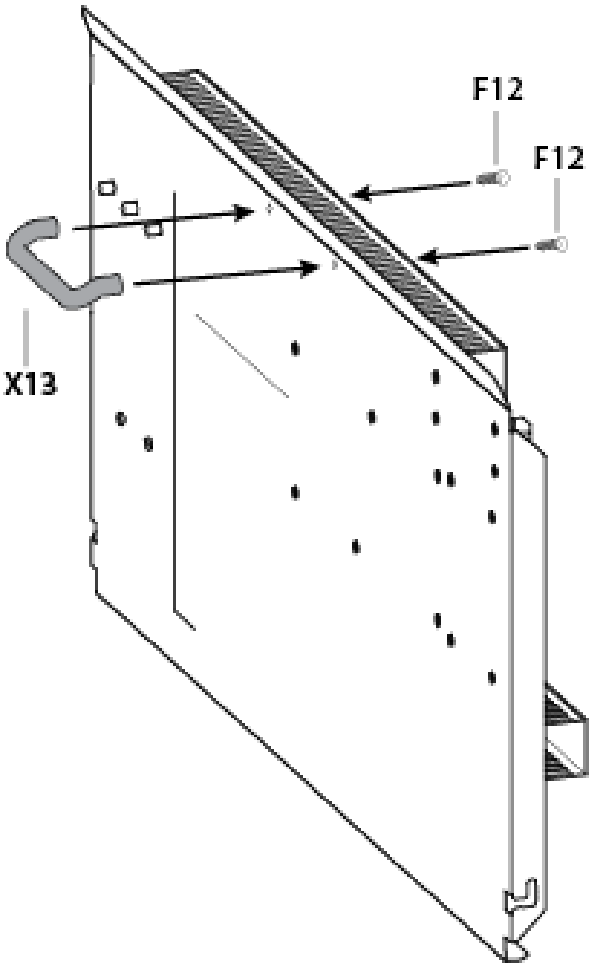

28

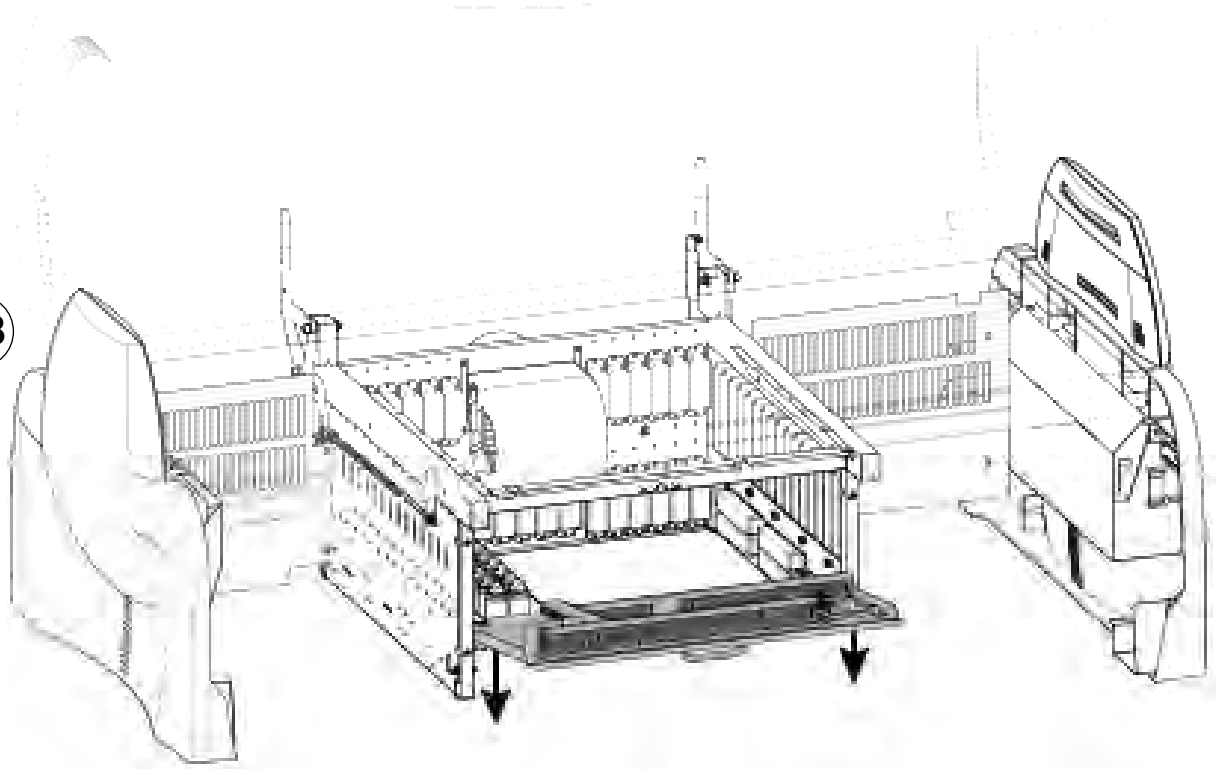

29

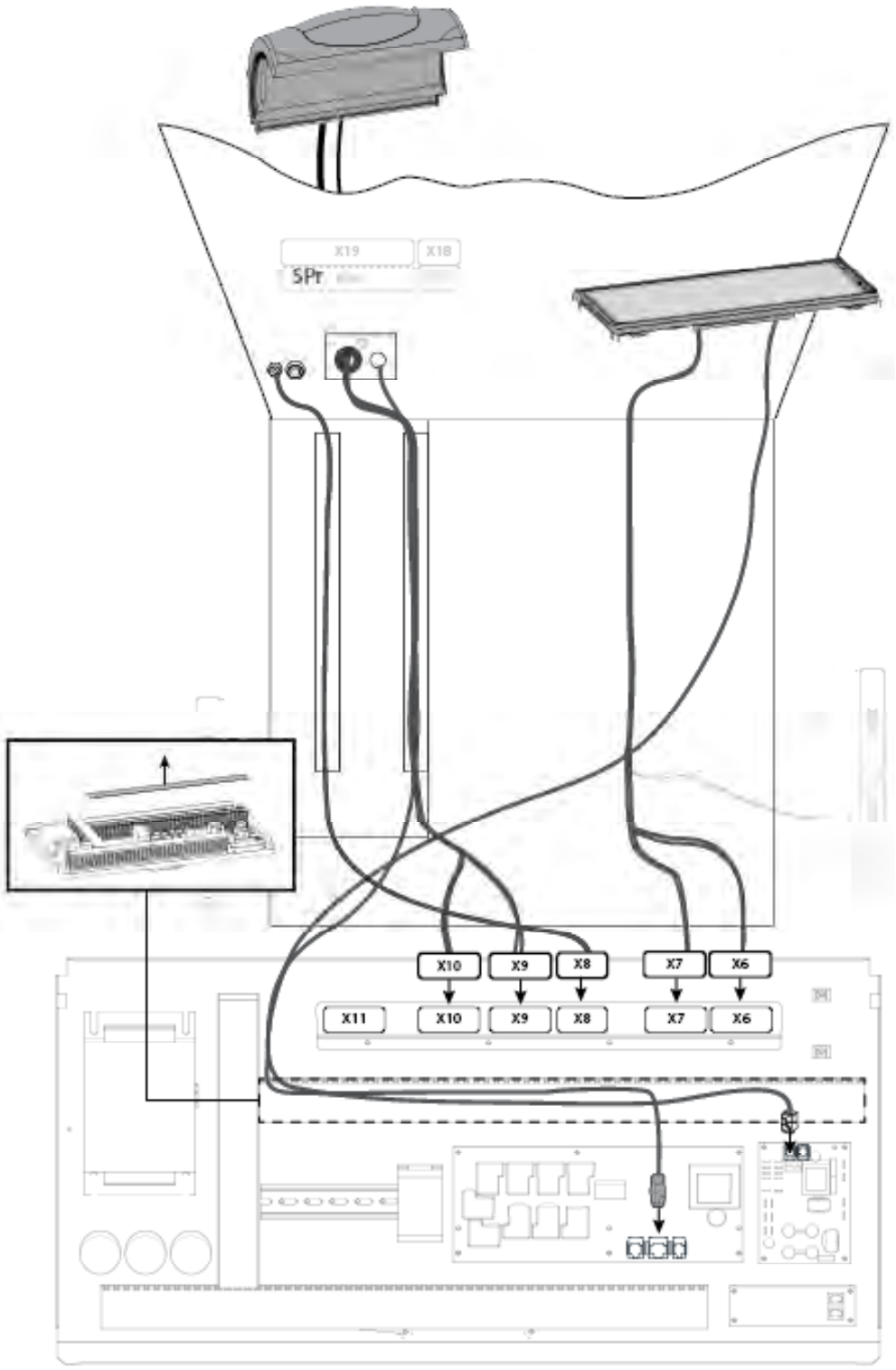

30

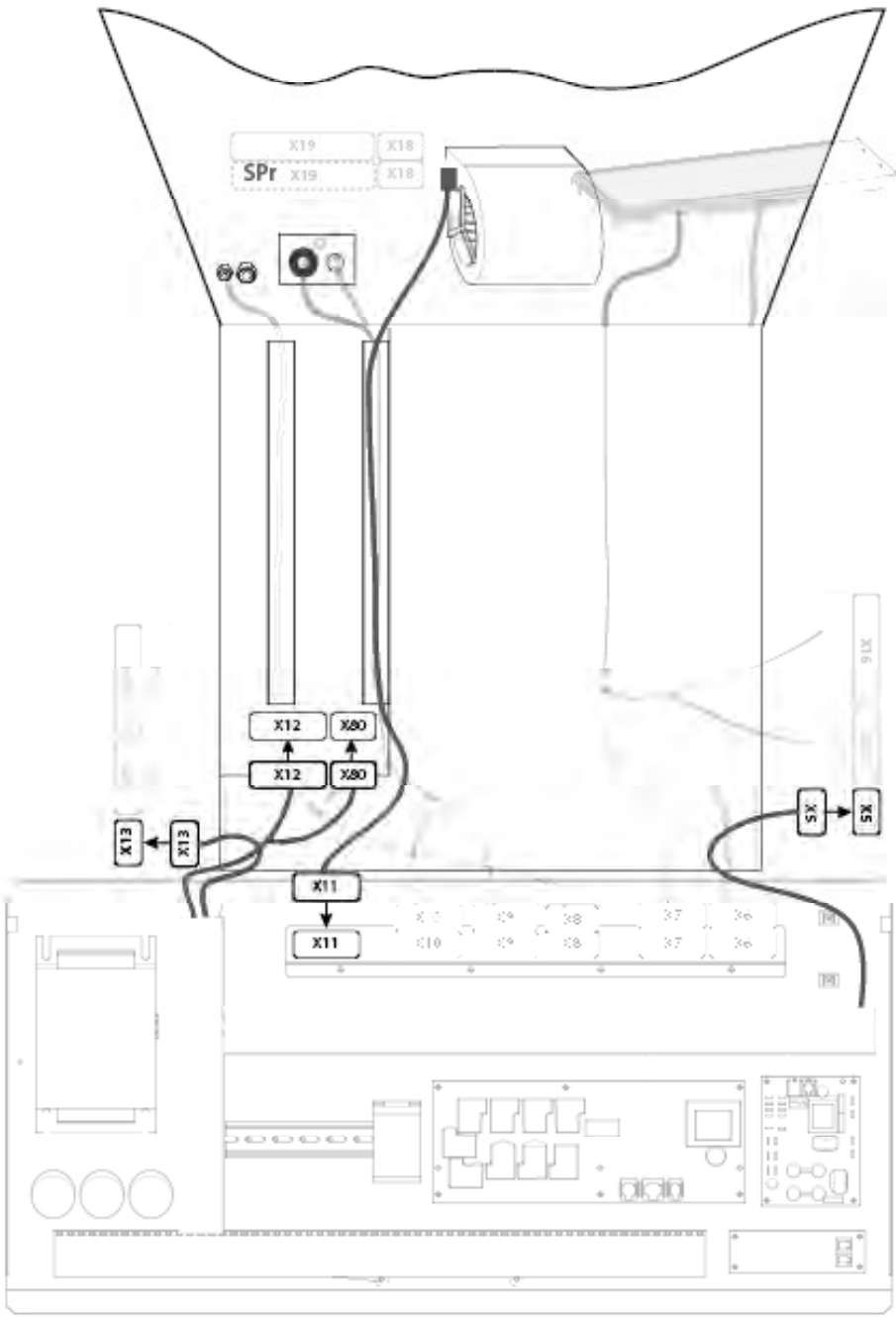

31

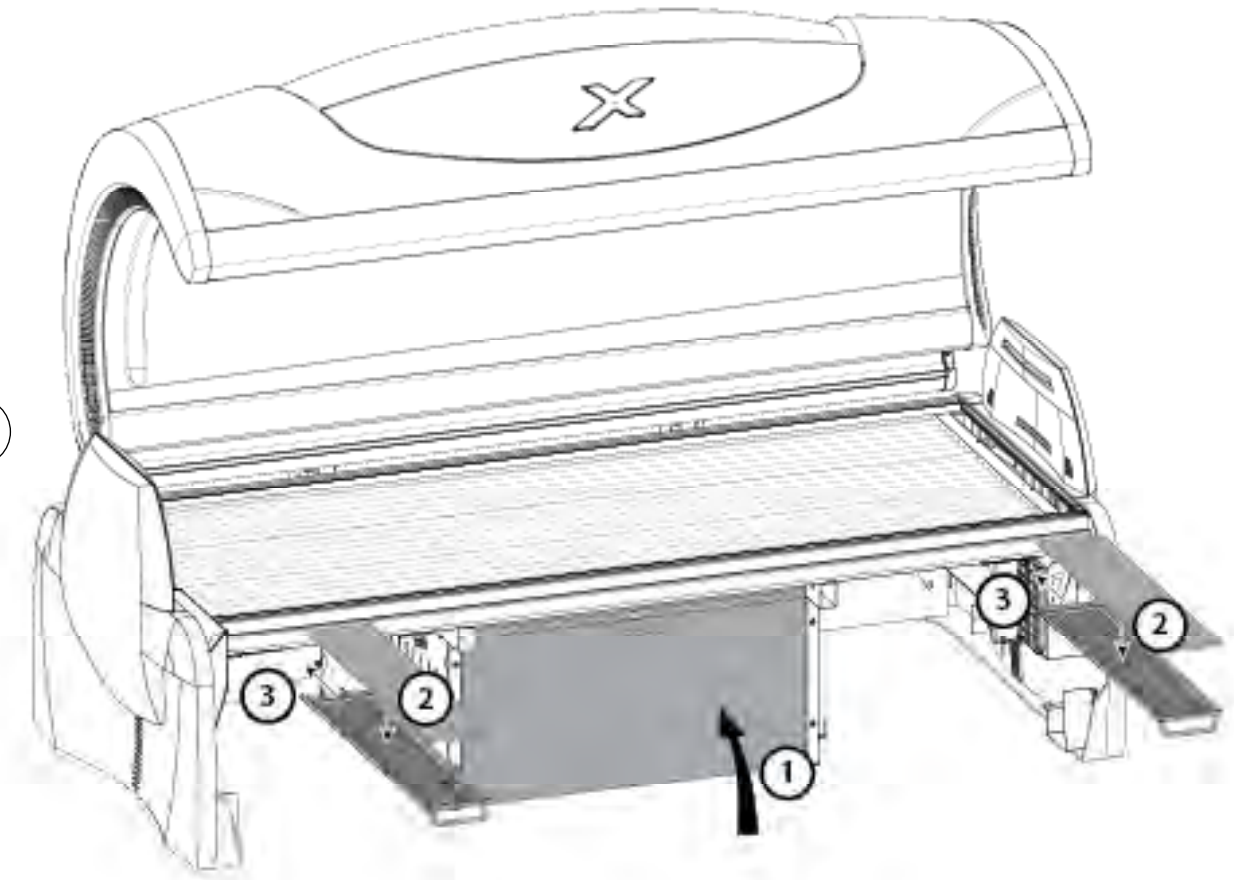

32

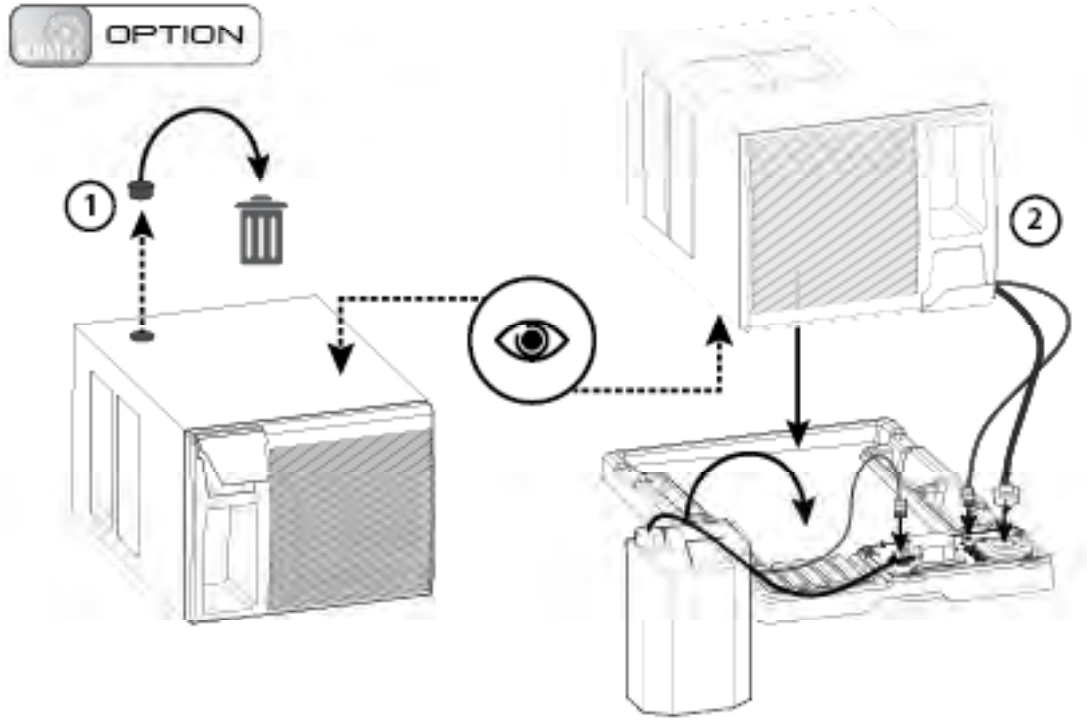

33

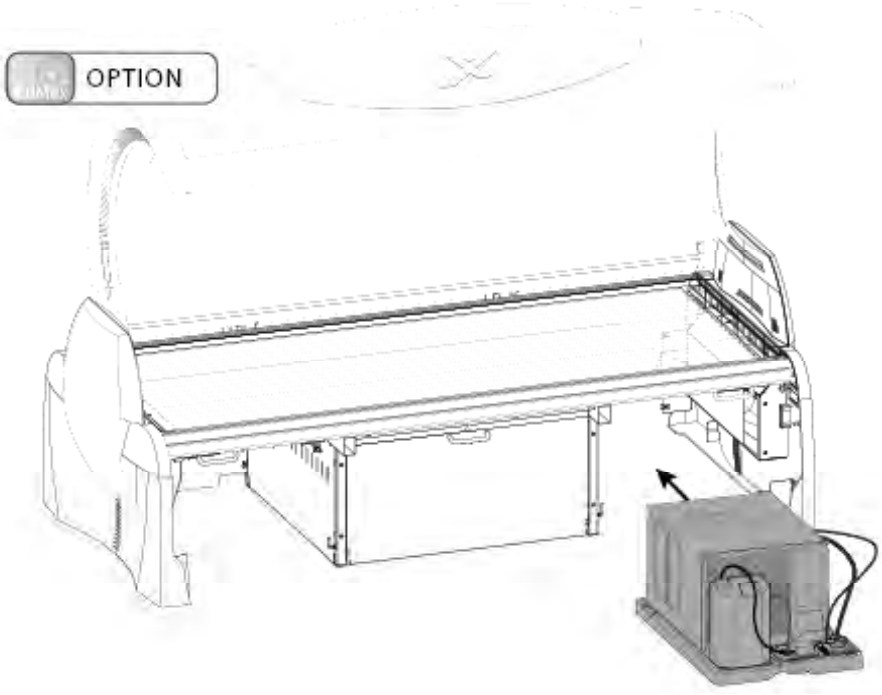

34

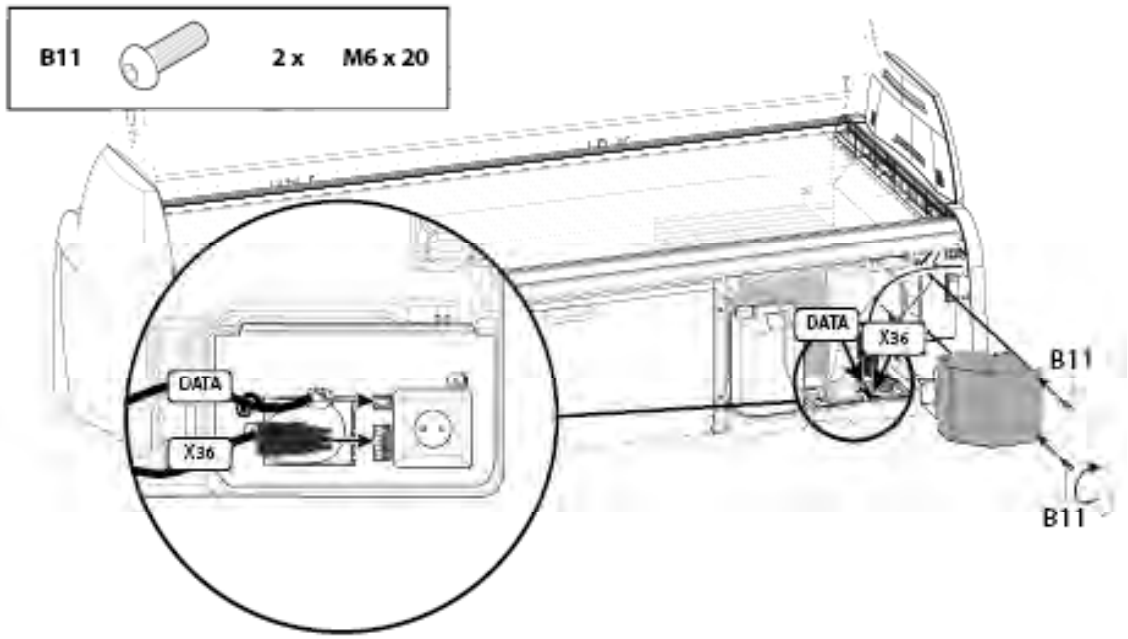

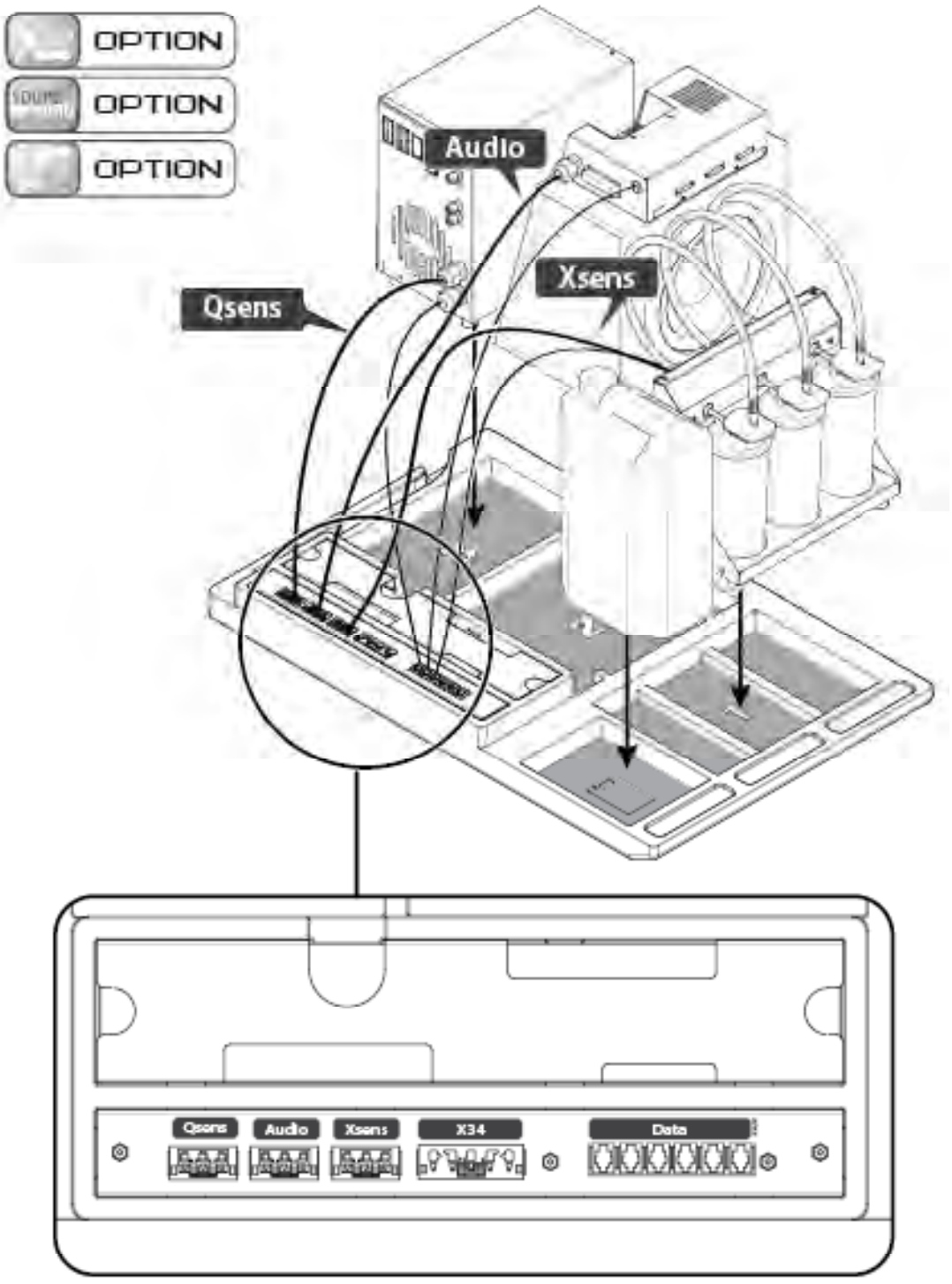
OPTION
OPTION
OPTION
Audio
Xsens
Qsens
Qsens
Audio
Xsens
X34
Data

35

36

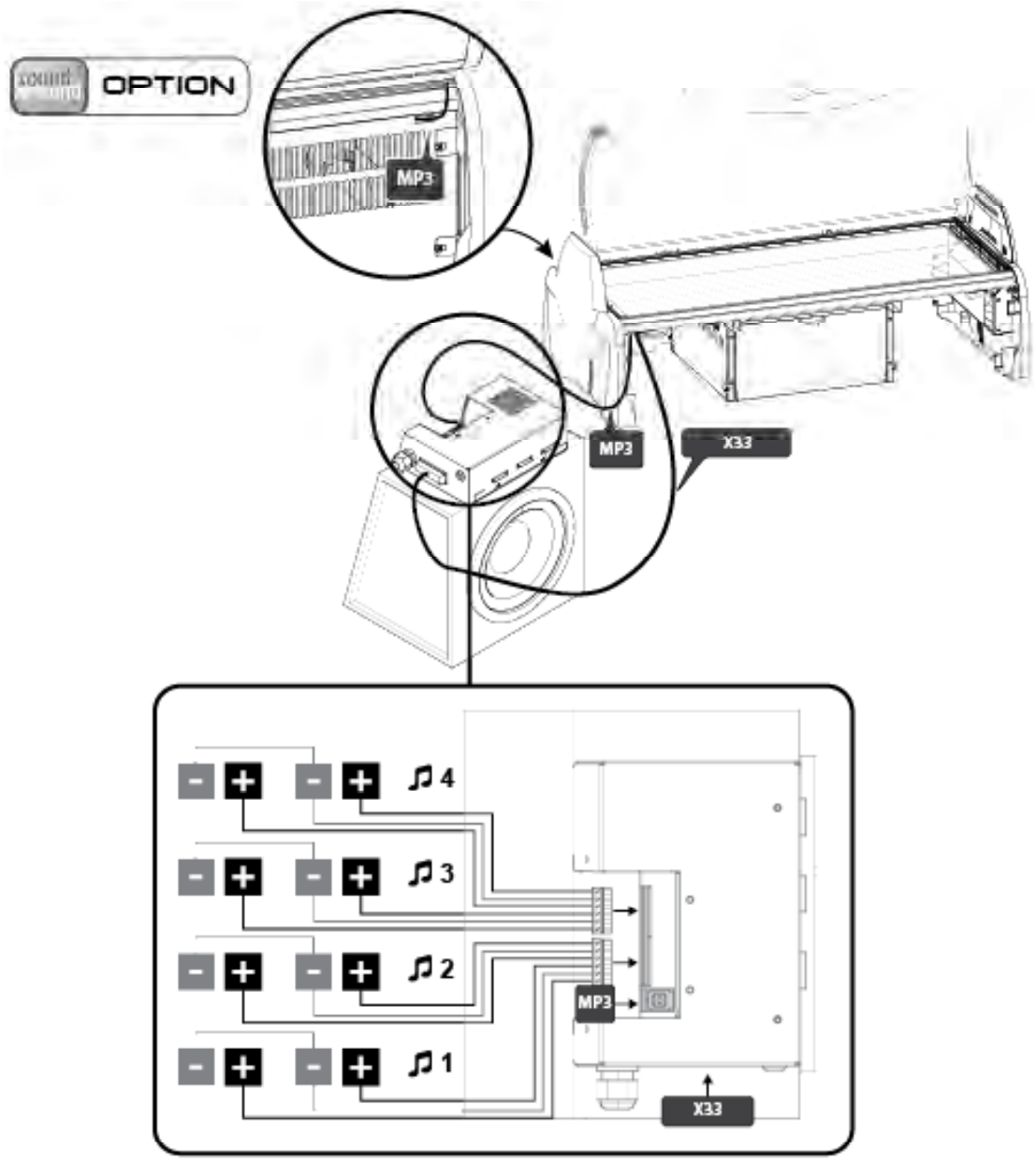

OPTION

37

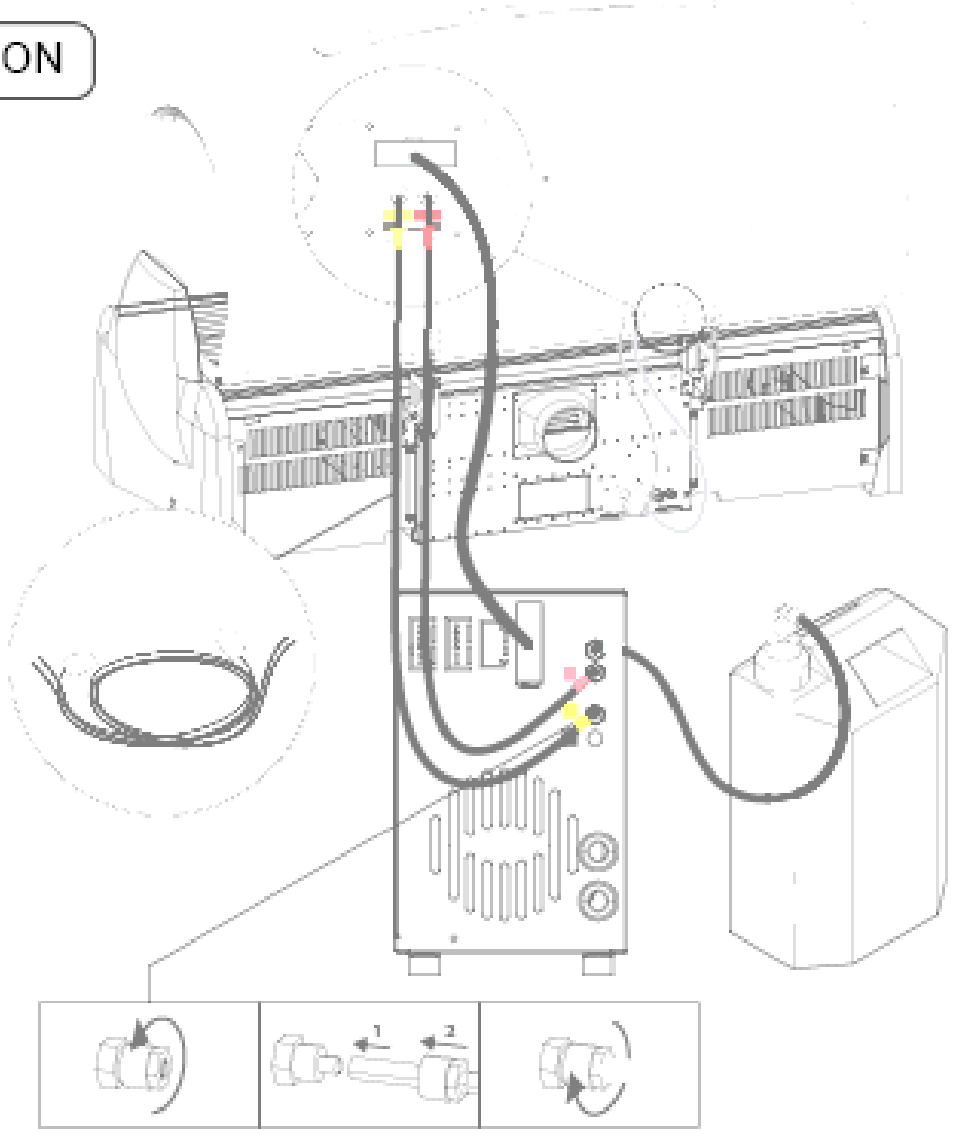

38

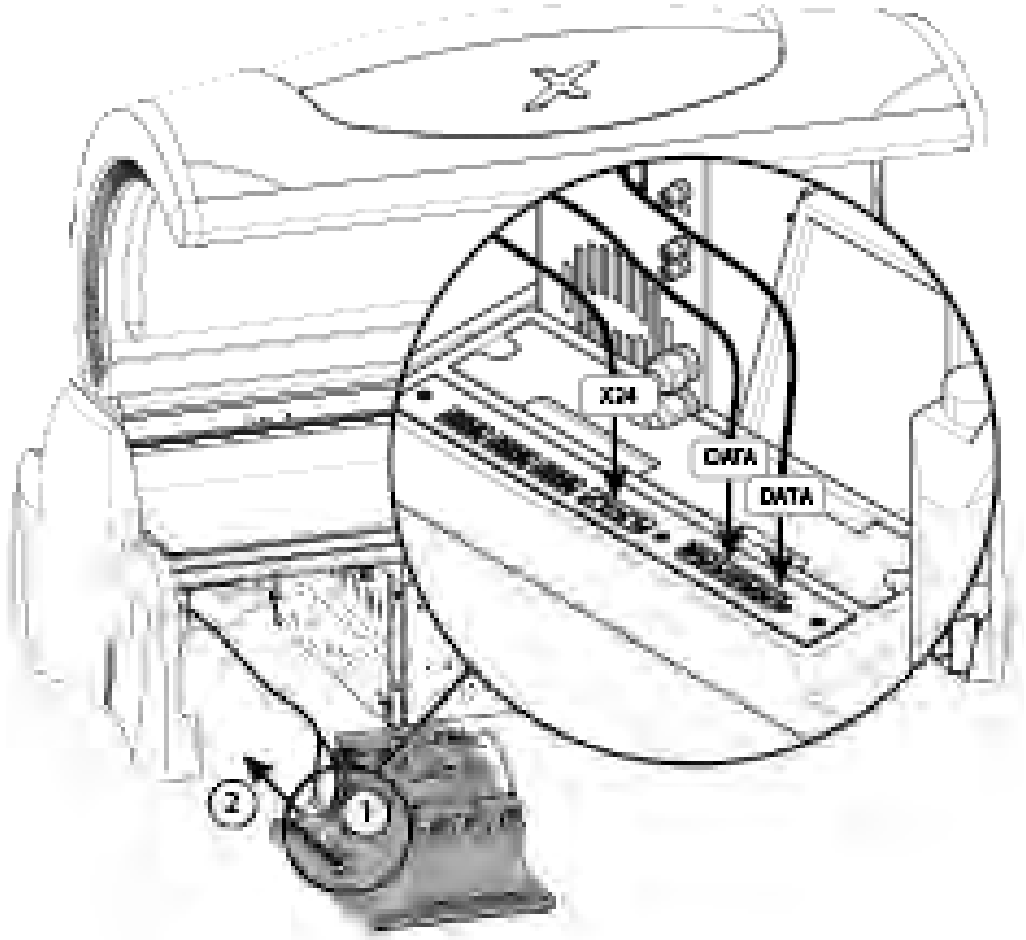

39

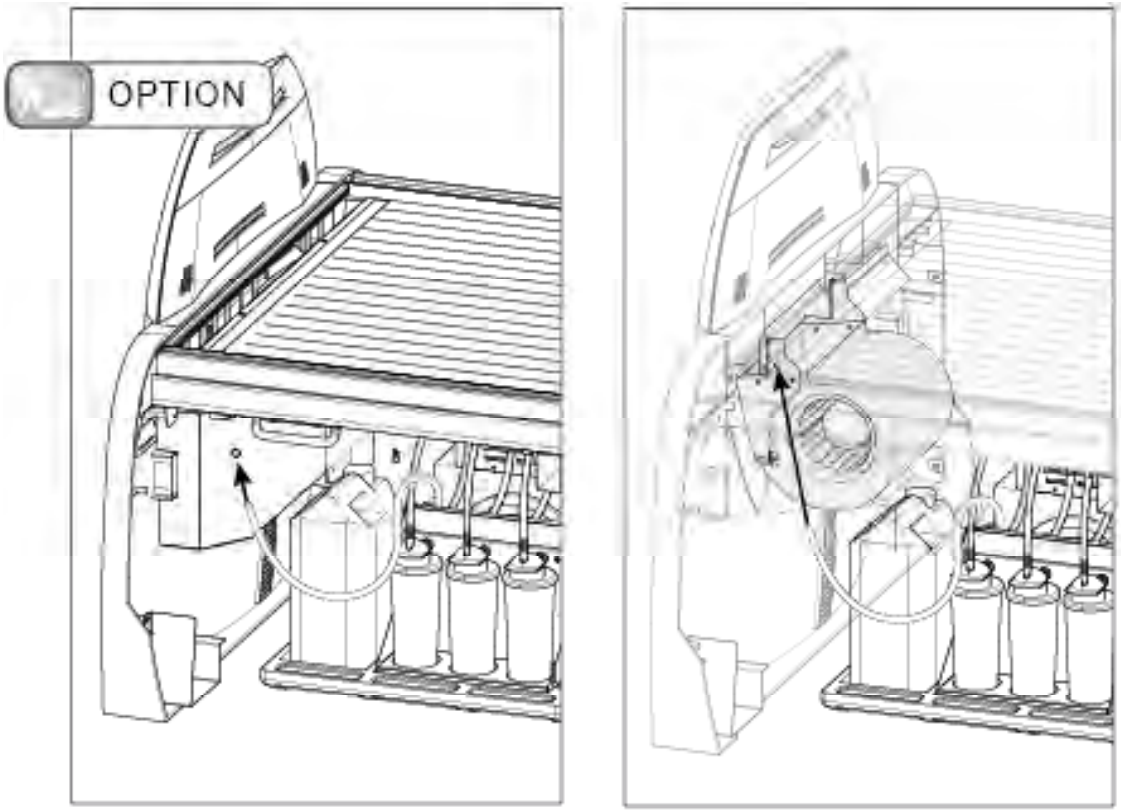

40

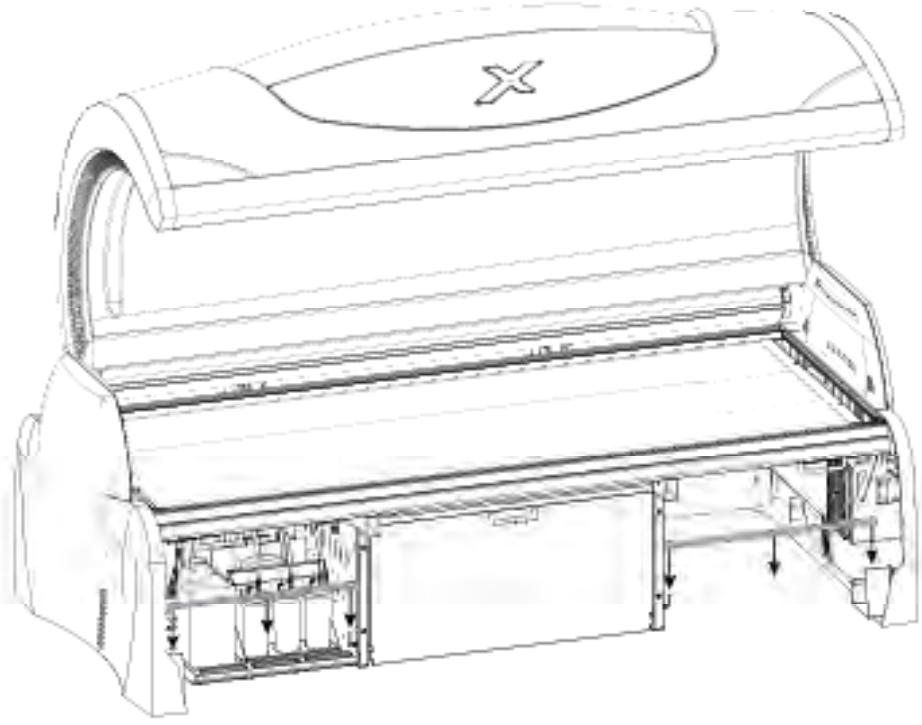

41

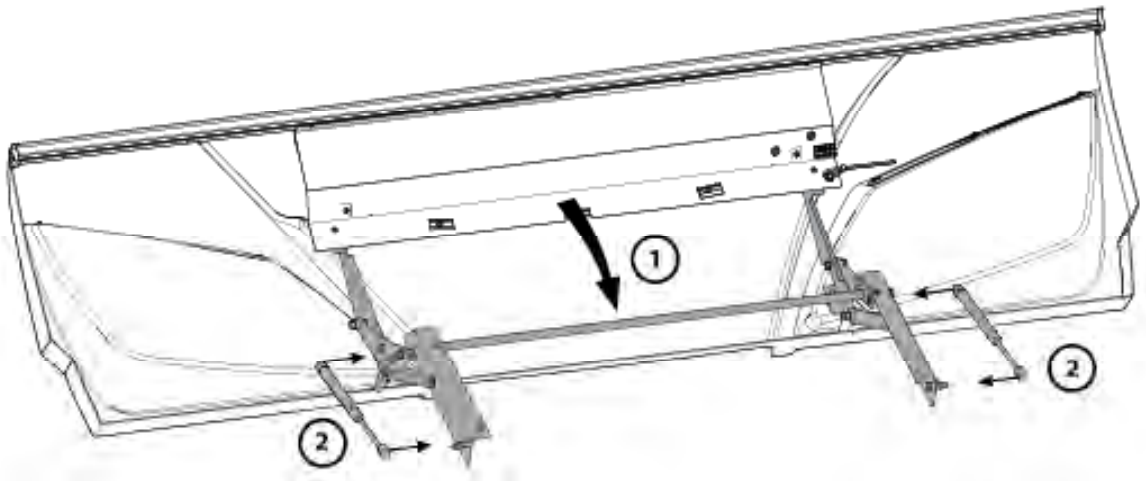

42

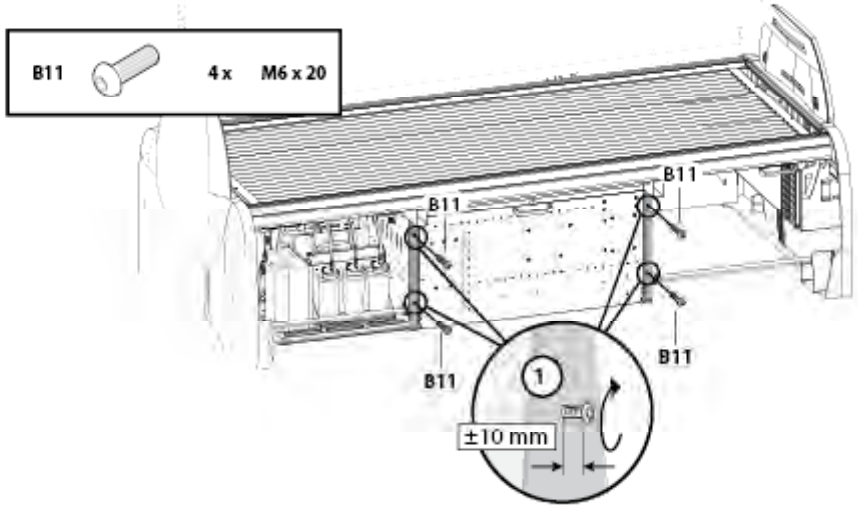

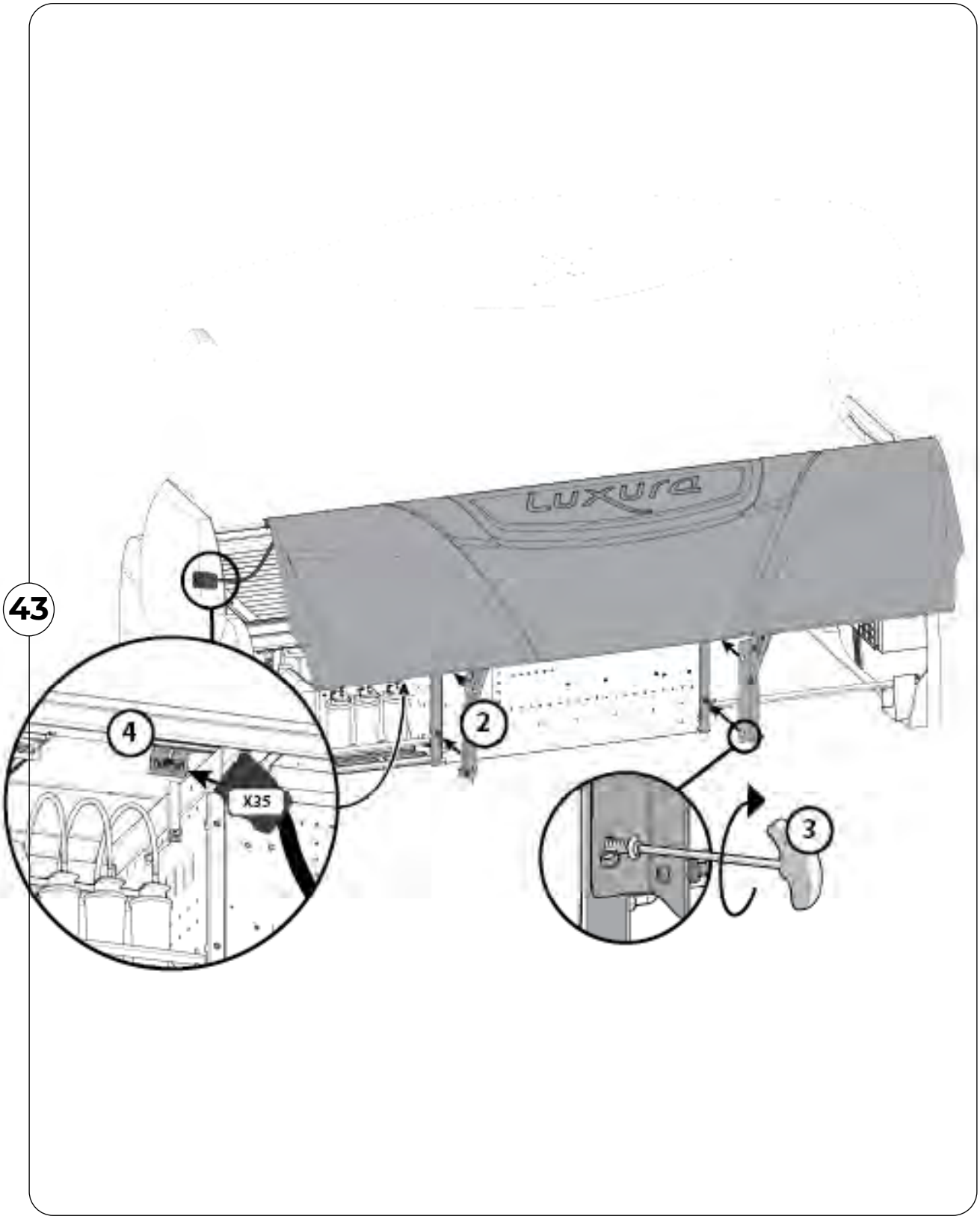
43
4
X35
2
3
Luxura

44



45

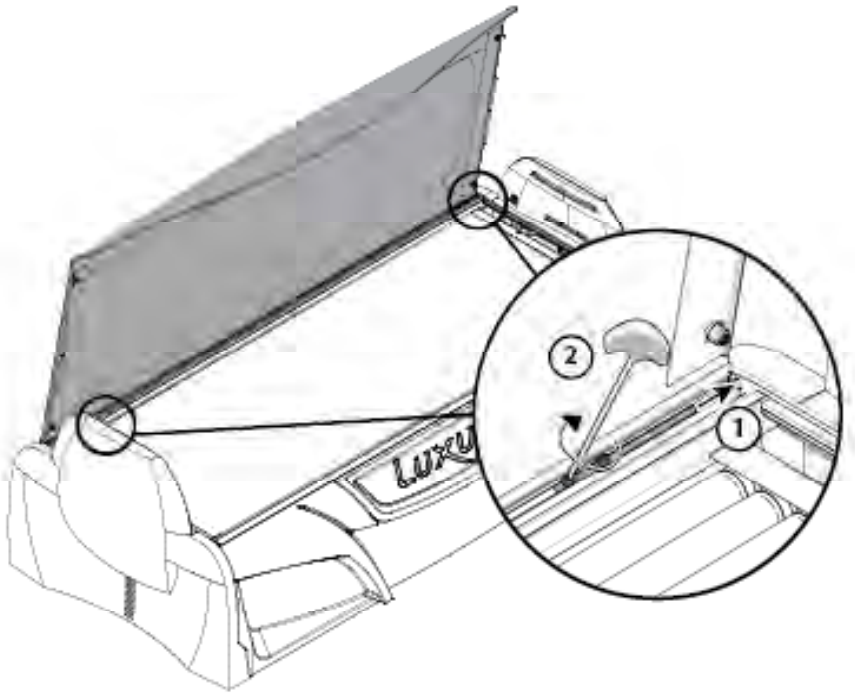

46

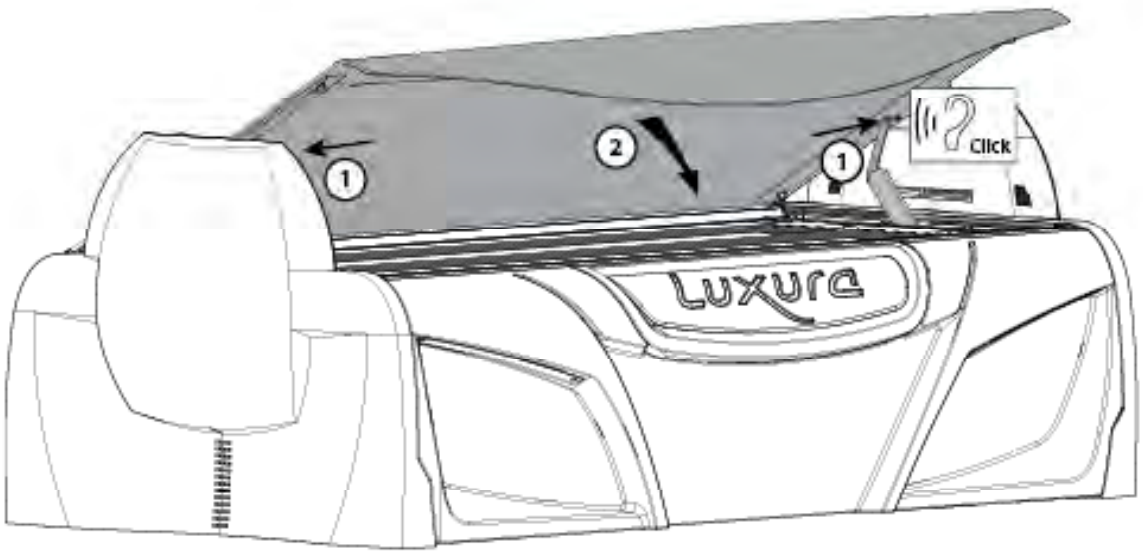

47

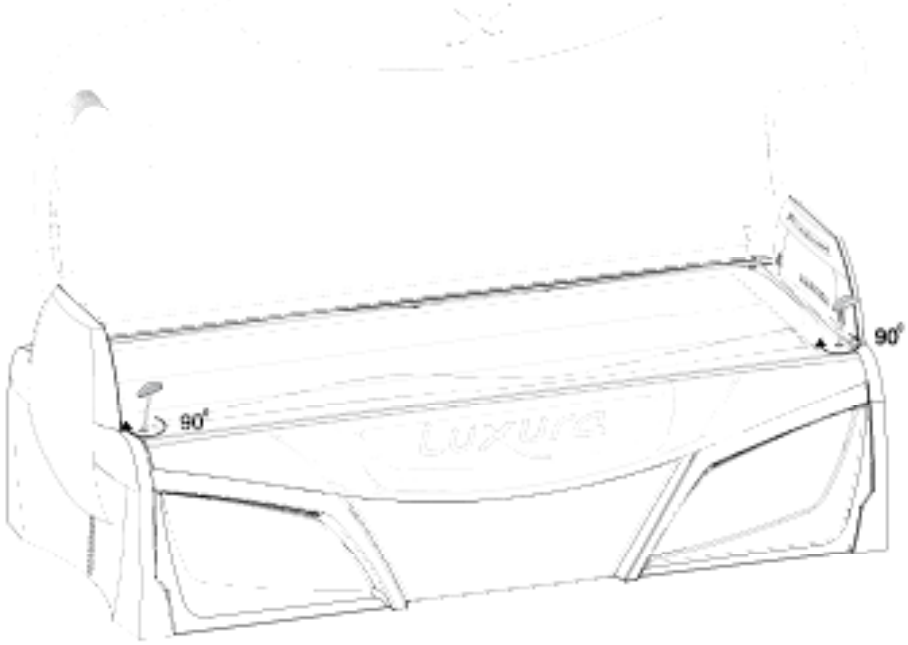

Warranty

ProSun Commercial Tanning Bed Warranty
LIMITED WARRANTY
Revised September 2020

Warranty Period:
Provided it is still owned and operated by the original owner, PROSUN warrants all equipment manufactured or imported by it to be free from defects in material under normal use and service. Warranty Periods as specified below are from the date of delivery to the location. The warranty is non-transferable and is only valid for the original purchaser of the equipment.

What is covered:
During the Limited Warranty period as specified below, PROSUN will be repair or replace any defective system or components found to be defective, at PROSUN's sole discretion. Prior to making any repairs, the owner must provide PROSUN with information requested and perform basic troubleshooting. PROSUN will review the problem and provide disposition of parts and guidance to the authorized technicians performing the adjustments or repairs. Any repairs attempted or damage done as a result of such attempts, prior to reporting the problem for disposition and guidance by PROSUN customer service, shall void the limited warranty.

The cost to the Purchaser is based on the proration of the warranty on the defective system or components and labor. The limited warranty is as follows:

- 10 year warranty on steel frame
- 12 Months on Electronic Components.
- 90 days on Labor.

General Warranty Terms and Limitations:

- The Warranty Period is based on the date of delivery.
- The Limited Warranty will be null and void if equipment has been damaged and not reported and repaired or maintenance/service has not been performed as defined in the User Manual.
- Equipment must be owned by the original owner, in original installed location. It may not have been physically moved from its original installed location unless otherwise authorized by PROSUN and removal and reinstallation performed by PROSUN certified technicians. Failure to do so will void the warranty.
- Outside of the normal maintenance recommended in the User Manual, any work performed on the equipment by a non-authorized technician without the express consent of PROSUN will void the warranty.
- All warrantied parts will be sent out with Ground shipping costs, expedited shipping will have an additional charge to the customer.
- Replacement parts purchased after the original warranty period are extended a 90-day warranty only if those parts have been purchased from PROSUN and installed per PROSUN's instructions and approval.
  Note: Payment in full is required prior to shipping replacement parts outside the warranty period or not included in the warranty. Any product being returned to PROSUN for repair, replacement or return must be adequately packaged to prevent freight damage and must be shipped via traceable methods unless otherwise authorized in writing by PROSUN.

What is not covered:

- Labor to replace warrantied parts or make repairs outside of the labor warranty period, or to perform annual maintenance.
- Any parts affected by discoloration or use of non-approved cleaners
- Damage caused by use for anything but its intended use, mishandling, abuse, negligence, external trauma due to overloading or not maintaining the equipment properly.
- Cosmetic damage, whether intended or due to wear and use.
- Damage due to improper electrical installation or connection including overpower, under power, and incorrect service connection - including any failure to the external voltage transformer (i.e. Buckboosters)
- Cracked or broken cover plates, end caps and sidebars
- Any failure of the external timing system (example: T-Max, FST timers and timer system components).
- Any damage caused by the failure of any supporting hardware not supplied by PROSUN.
- Acrylic sheets, starters (igniters), lamps, blue and clear filter glass.
- Tanning units, parts or components damaged in transit where PROSUN'S damaged goods policy is not followed by purchaser or purchaser's designee.

THIS WARRANTY DOES NOT APPLY TO ANY FAILURE OF PRODUCT DUE TO ALTERATIONS, MODIFICATIONS, MISUSE, ABUSE, NEGLECT, ACT OF GOD, ACCIDENT, IMPROPER MAINTENANCE (INCLUDING LACK OF ANNUAL MAINTENANCE) OR INSTALLATION, USE OF PARTS NOT SUPPLIED BY PROSUN, FAILURE TO OPERATE AND USE THE PRODUCT IN ACCORDANCE WITH THE INSTRUCTIONS PROVIDED IN THE OWNER'S MANUAL SUPPLIED WITH THE PRODUCT OR FAILURE TO OTHERWISE MEET MANUFACTURER'S SPECIFICATIONS, OR IF THE SERIAL NUMBER HAS BEEN REMOVED, ALTERED OR DEFACED. ANY DAMGES CAUSED BY THE USE OF NON-DISTILLED WATER.

Procedure for Requesting Warranty Work and Parts:
In the event of an issue that is covered under this limited warranty agreement, the customer must first contact PROSUN. PROSUN Customer Service will initiate a service ticket and issue you a Warranty/Incident claim number. The customer must work with ProSun by phone or email to provide all necessary information on the issue with the equipment and perform basic troubleshooting tasks.

1. If your equipment has a manufacturer's defect within the first 90 days, the necessary parts will be sent to you via expedited shipping options. After being given a claim number by customer service, you will be sent and must sig n our warranty documentation and return it to PROSUN prior to the parts being sent out, unless otherwise authorized by a ProSun representative.
2. A return shipping label will be provided. You will need to return the original or any unused parts to PROSUN unless otherwise advised in writing. If the original defective parts are not returned within 30 days, you will be responsible for the purchase charges for the parts. If unpaid, your account will be placed on hold until the issue has been resolved.
3. Any warranty parts needed outside of 90 day warranty period will require payment up front, unless otherwise authorized by a ProSun representative. A return label will be provided with your warranty parts and a full credit will be provided to your payment method within 10 business days of receiving the original or returned unused parts. If parts are not returned within 90 days or have been damaged, a credit will not be issued or may be subject to a restocking fee.
4. Depending on the labor warranty as stated in this agreement, PROSUN will help the customer by phone to replace the component or will schedule a technician to perform the service work.

Right to Modify:
PROSUN reserves the right to make changes or improvements to its products without incurring any obligations to similarly alter products which have been previously purchased.

Exclusivity of Warranty:
This warranty is the only warranty made by PROSUN and may only be modified or amended by a written instrument signed by a duly authorized officer of PROSUN. PROSUN's sole and exclusive liability and Purchaser's sole and exclusive remedy under this warranty shall be, at PROSUN's discretion, to repair or replace, to the extent available on a prorated basis, any such defective Products. These remedies are available only if PROSUN's examination of such Products discloses to PROSUN's satisfaction that such defects actually exist and were not caused by Purchaser's misuse, abuse, neglect, improper installation, maintenance or testing, alterations or modifications, failure to meet manufacturer's specifications or any other cause beyond the range of normal usage, or by accident, fire or other hazard. Repair or replacement of a part does not extend the warranty period or extend the prorated value of a part or product beyond the initial limited warranty periods as specified and set forth above.

THE WARRANTY SET FORTH ABOVE IS IN LIEU OF ALL OTHER WARRANTIES, EXPRESS OR IMPLIED, INCLUDING BUT NOT LIMITED TO ANY IMPLIED WARRANTY OF MERCHANTABILITY OR FITNESS FOR A PARTICULAR PURPOSE. IN NO EVENT SHALL PROSUN BE LIABLE FOR ANY INCIDENTAL OR CONSEQUENTIAL DAMAGES WITH RESPECT TO THE PRODUCTS DELIVERED HEREUNDER OR SUBSEQUENT USE THEREOF.

Limitation of Liability:
PROSUN shall not be liable for any loss, damages, or penalty resulting from failure to perform any of its obligations under this Agreement due to major force or any cause beyond its reasonable control.

PROSUN'S LIABILITY UNDER OR FOR BREACH OF THIS AGREEMENT SHALL NOT EXCEED THE REFUND OF THE PURCHASE PRICE LESS REASONABLE RENTAL FOR PAST USE. IN NO EVENT SHALL PROSUN BE LIABLE FOR COSTS OF PROCUREMENT OF SUBSTITUTE GOODS BY THE PURCHASER OR FOR UNAUTHORIZED REPAIRS UNDERTAKEN BY THE PURCHASER WITHOUT PROSUN'S PREVIOUS WRITTEN APPROVAL. IN NO EVENT SHALL PROSUN BE LIABLE FOR ANY SPECIAL, CONSEQUENTIAL, OR INCIDENTAL DAMAGES, HOWEVER CAUSED, WHETHER FOR BREACH OF WARRANTY, NEGLIGENCE, OR OTHERWISE. PROSUN DISCLAIMS ANY OBLIGATION OR LIABILITY FOR LOSS OF USE OF THE PRODUCT WARRANTED, LOSS OF TIME, INCONVENIENCE, RENTAL OR SUBSTITUTE PRODUCTS, LOSS OF BUSINESS, LOSS OF INCOME, COMMERCIAL LOSS OR ANY OTHER DIRECT, CONSEQUENTIAL, SPECIAL OR INCIDENTAL DAMAGES.

Governing Law: Notwithstanding principles of conflicts of law of any jurisdiction to the contrary, all terms and provisions of this Agreement are to be construed and governed by the laws of the state of Florida without regard to the laws of any other jurisdiction. The Purchaser waives any and all privileges and rights which they may have under Chapter 47, Florida Statutes (1993), relating to venue as it now exists or may hereafter be amended, and under any other statute, or administrative provision thereof in any legal action on this Agreement; and further, the Purchaser agrees that any legal action brought on this Agreement or in connection therewith, shall be brought in the appropriate court in Pinellas County, Florida.

Attorney's Fees: Should a dispute arise with regard to this warranty or any other aspect of this sale the prevailing party shall be entitled to reasonable attorney's fees and costs through appeal under Florida Law.

X7

ProSun
INTERNATIONAL



ProSun International

2442 23rd Street North
St Petersburg, FL 33713

www.ProSun.com

727.825.0400

Contraindication: This Product Is Contraindicated For Use On Persons Under The Age Of 18 Years. “Contraindication: This Product Must Not Be Used If Skin Lesions Or Open Wounds Are Present.” “Warning: This Product Should Not Be Used On Individuals Who Have Had Skin Cancer Or Have A Family History Of Skin Cancer.” “Warning: Persons Repeatedly Exposed To UV Radiation Should Be Regularly Evaluated For Skin Cancer.